SERVICE MANUAL

AXOR INDUSTRIES®

ENGLISH

MACK® Indy

Twenty years of great motordrives

Projected Produced Assembled

100% Made in Italy

NO JOINT CONSTRUCTION

Release	Notes
ver.1 rev. 12/'14	First preliminary edition.
ver.1 rev. 07/'15	Chapter 1, 2, 3, 4 and 5 updated.
ver.1 rev. 10/'15	Chapter 3 updated.
ver.1 rev. 04/'16	Chapter 1, 2, 3, 4 and 5 updated.

THIS MANUAL CONTAINS A DESCRIPTION OF MACK® INDY AND A GUIDELINES FOR THE DRIVE'S INSTALLATION.

USING THE DRIVE INCORRECTLY CAN INJURE PEOPLE OR MANAGE THINGS. FULLY RESPECT THE TECHNICAL DATA AND INDICATIONS ON CONNECTION CONDITIONS.

Summary

1) Description

2) Installation

3) Diagnostic

4)Operative Modes

Summary

5)SpeederOne Interface

Chapter 1
Description

1.1 Description

The **MACK® INDY** is a digital drive capable of piloting both rotary AC brushless motors and linear motors, up to **500W**. It can be supplied by a single phase voltage equal to **1x230Vac** (±15%).

OPERATIVE MODES		
DIGITAL SPEED CONTROL	It is speed piloting utilising a digital reference.	standard
ANALOG SPEED CONTROL	It is speed piloting utilising an analogue reference (differential or common mode).	optional
DIGITAL TORQUE CONTROL	It is torque piloting utilising a digital reference.	standard
ANALOG TORQUE CONTROL	It is torque piloting utilising an analogue reference.	optional
GEARING	It is possible to pilot the drive with the quadrature signals of an emulated encoder from a Master drive or with the quadrature signals of an incremental encoder from a Master motor (Electrical Axis or Gearing).	standard
PULSE/DIRECTION	It is possible to connect the drive to a **stepper-motor controller**, piloting it with the +/-Pulse and +/-Dir signals (Pulse/Dir Mode).	standard
CW/CCW	The motor is piloted with a pulse signal applied on the input **H.DIR/L.DIR/0.DIR** or **H.CK/L.CK/0.CK** to get rispectively the rotation of motor in clockwise direction or counter-clockwise.	standard
CANBUS	The drive can be configured and controlled using Can Bus. It supports the following **Can Open** protocols: • part of the **DS301-V4.02** • part of the **DSP402-V2.0**	optional
ETHERCAT	The drive can be configured and controlled using **EtherCAT.**	optional
SQUARE WAVE	The motor is piloted with a "square wave" signal or with two digital programmable quote. This is useful for adjustments of the speed loop.	standard
ANALOG to POSITION	The motor moves between two programmable positions corrisponding the min and max voltages at the dedicated pins.	standard
FEEDBACK		
COMMUTATION ENCODER	Commutation encoder + hall.	standard
SERIAL ENCODER	Serial angular encoder.	optional
ABSOLUTE ENCODER	Absolute multiturn encoder.	*Soon available*

1.1 Description

DIGITAL INPUTS/ OUTPUTS		
2 DIGITAL INPUTS (IN1 & IN6) OPTO-ISOLATED NOT PROGRAMMABLE	The digital inputs are programmed as following: IN1: ENABLE IN6: RESET FAULT	standard
4 DIGITAL INPUTS (IN2÷IN5) OPTO-ISOLATED PROGRAMMABLE	The digital inputs are programmable with the option present in chapter 5.10.	standard
1 DIGITAL INPUTS (OUT3) OPTO-ISOLATED NOT PROGRAMMABLE	The digital output are programmed as following: OUT3: HOLDING BREAK	standard
2 DIGITAL OUTPUT (OUT1 ÷ OUT2) OPTO-ISOLATED PROGRAMMABLE	The digital outputs are programmable with the option present in chapter 5.10.	standard
STANDARD AND ADDITIONAL FEATURES		
EMI FILTER	Are avviable **two EMI anti-disturbace filter** integrated for power supply and auxiliary power supply.	optional
SPEEDER ONE SOFTWARE INTERFACE	The Axor Speeder One interface allows user to set and manage all Mack® Indy's parameters, just using an USB single access cable.	standard
SAFETY		
SAFETY	The converter is protected from short circuitry, the Max/Min Voltage, over-temperature of the converter & motor, I^2t of drive, I^2t of motor.	standard
***SAFE TORQUE OFF* FUNCTION**	It is a safety function which avoids the accidental startup of the motor in the absence of +24Vdc on indicated pins (See enclosure "Manuale STO" to find more information provided by Axor on request).	optional

1.2 General view Mack® Indy

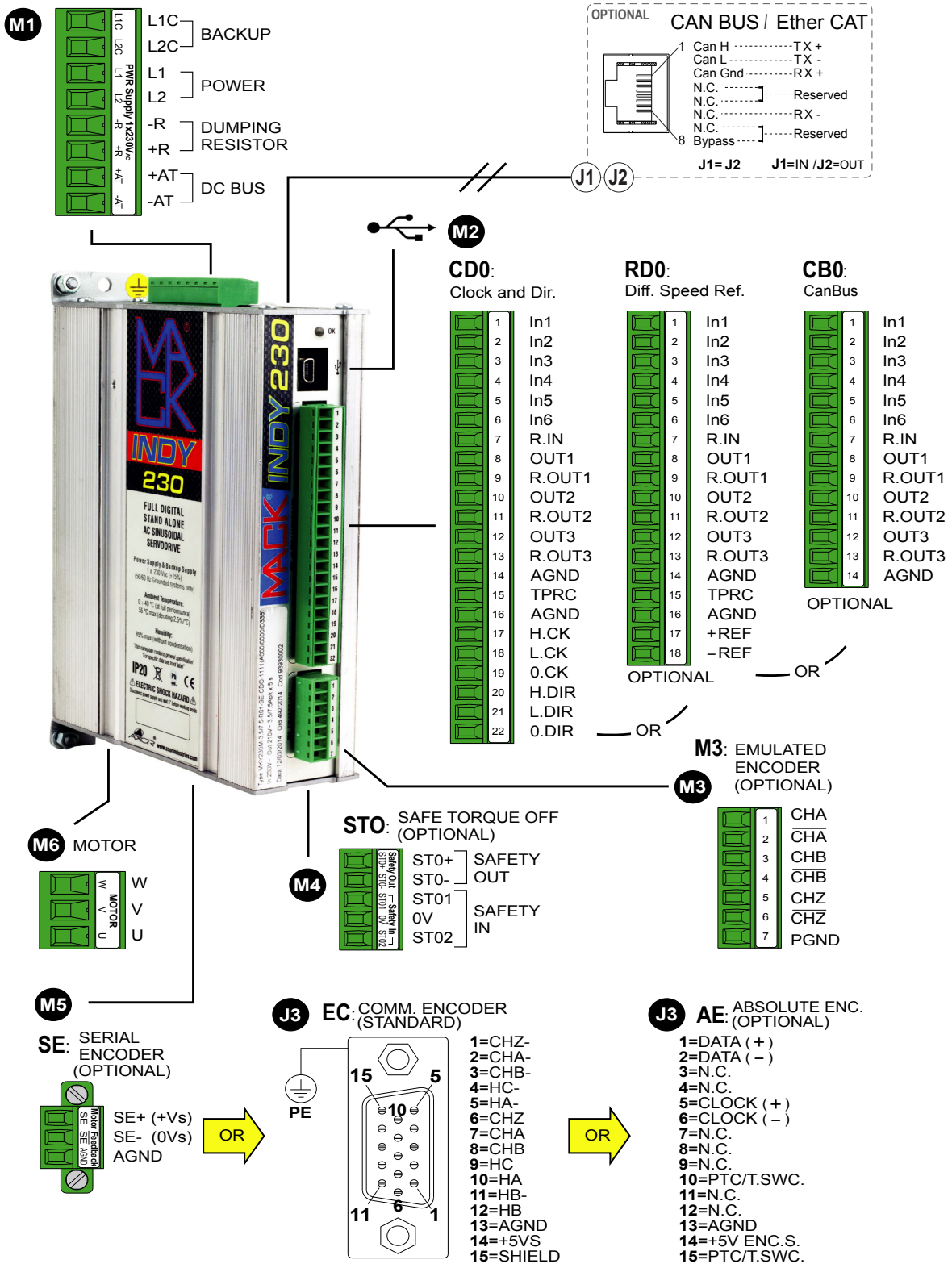

1.3 Technical Data

Mack® Indy Technical Data					
Power Supply (grounded system only)	Vac	**Single phase**: 1x230Vac ± 10% , 50/60Hz			
Auxiliary power supply (for back up)	Vac	**Single phase**: 1x230Vac ± 10% , 50/60Hz			
Size		**MKYD 230**			
		1,5/3	2,5/5	3,5/7	5/10
Nominal Current	Arms	1,5	2,5	3,5	5
Peak current for 5 sec.	Arms	3	5	7	10
PWM output frequency	kHz	8			
External Fuse Protection					
Backup	F1	1A T			
Power Supply	F2	6A T			
Dumping Resistor	F3	4A F			

Ambient condition during operation	**Temperature**	From **0°C** to **+40°C** (without condensation)[Class 3K3 according to EN 60721-3-3]. From **+40°C** to **+55°C** the drive must be derated 2.5%/°C in reference to nominal and peak current.
	Humidity	From **10%** to **85%** (without condensation) [Class 3K3 according to EN 60721-3-3].
	Vibration	Class 3M1 according to EN 60721-3-3.
Ambient condition during transport	**Temperature**	From **-25°C** to **+70°C** [Class 2K3 according to EN 60721-3-2].
	Humidity	Relative humidity max **85%** (without condensation) [Class 2K3 according to EN 60721-3-2].
	Vibration	Class 2M1 according to EN 60721-3-2.
Ambient condition during storage	**Temperature**	From **-20°C** to **+55°C** [Class 1K3 according to EN 60721-3-1].
	Humidity	Relative humidity from **5%** to **85%** (without condensation) [Class 1K3 according to EN 60721-3-1].
	Vibration	Class 1M1 according to EN 60721-3-1.

Control signals	
Optoisolated digital inputs	+24Vdc - 7mA (PLC compatible)
Optoisolated digital outputs 1-2	+24Vdc - 15mA (PLC compatible)
Optoisolated digital output 3	+24Vdc - 120mA (PLC compatible)
Pulse/Dir digital inputs Low	+5V, optoisolated, max. frequency 500kHz
Pulse/Dir digital inputs High	+24V, optoisolated, max. frequency 500kHz

Braking Resistance	
External Resistance	39Ω - 100W

1.4 Mechanical Dimension

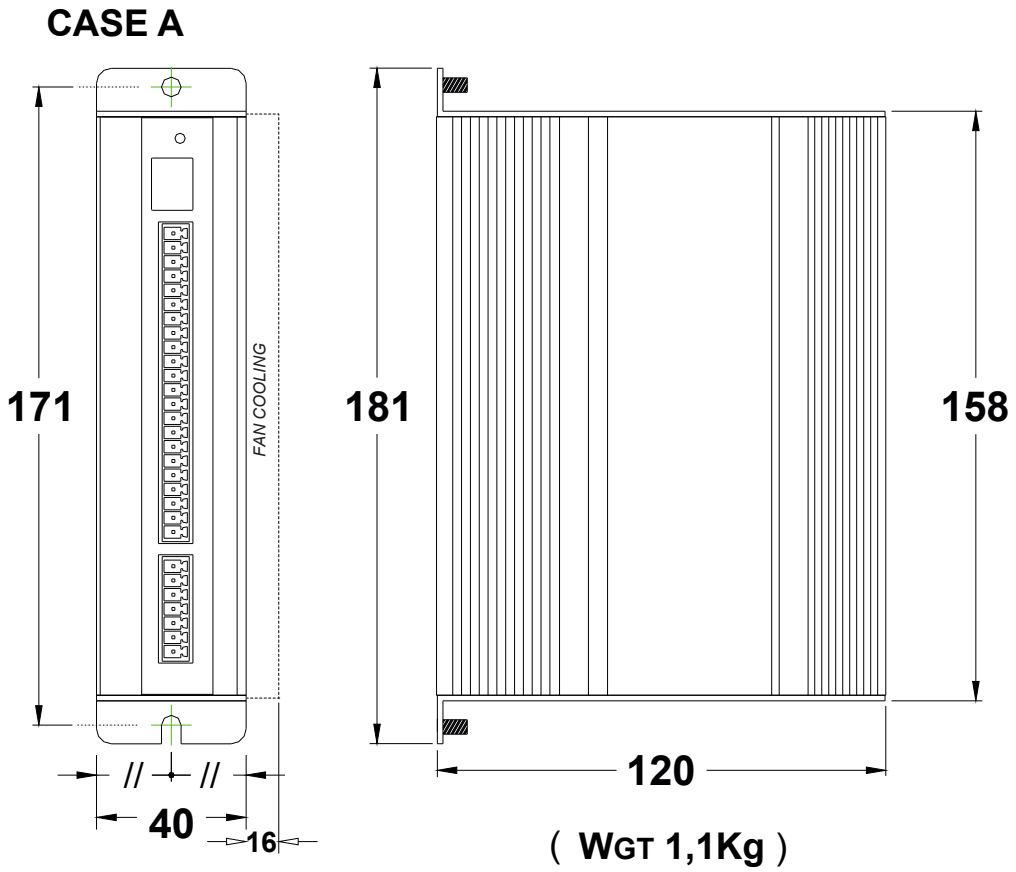

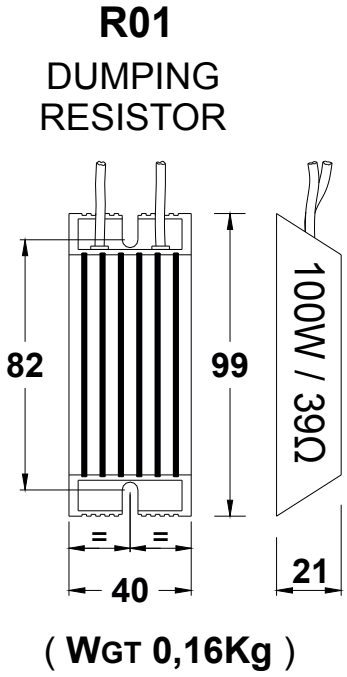

Mechanical specifications		
Drive assembly		Panel mount
External dimensions	mm	**181 x 120 x 40**
Weight	Kg	**1,1**
Weight with fan cooling	Kg	**1,3**

1.5 Product plate and Ordering Code

On the side of each **MACK® INDY** there is a ***product plate*** like the follow:

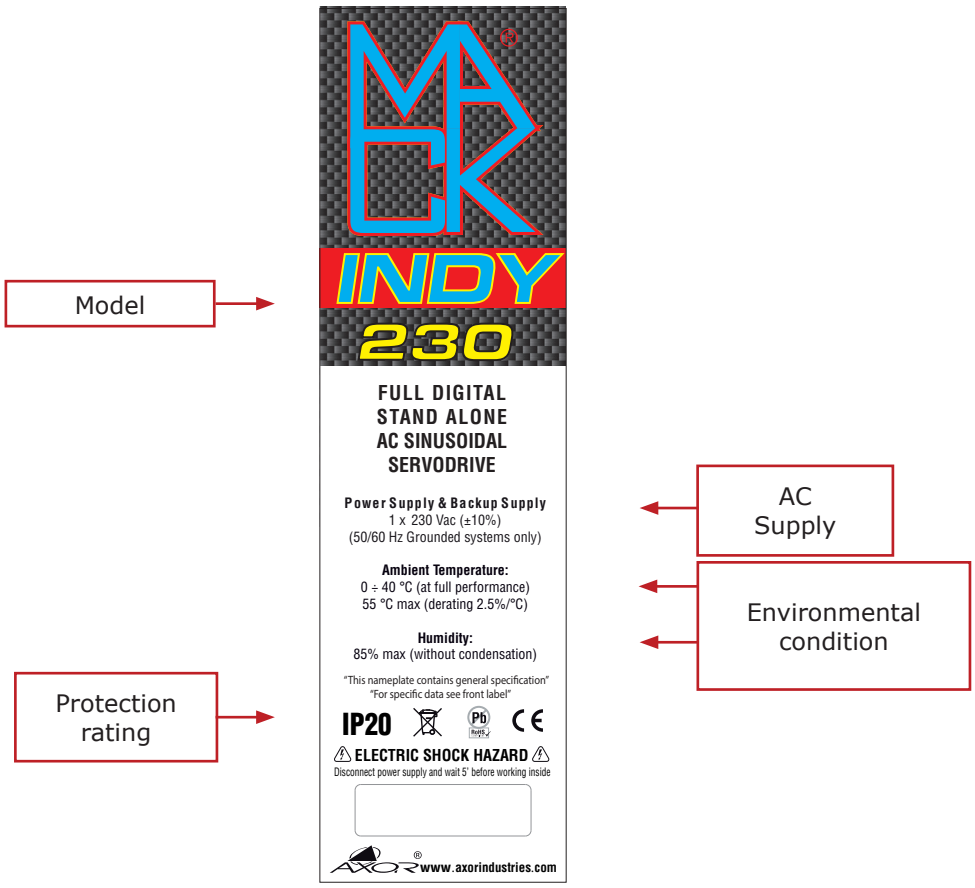

Ordering code:

MKYD 230M - 2.5/5 - R01 EC - RDO - 0 0 0 0 - Sxxx

Name: Drive Line

Power Supply:
230M = 1X230Vac

Size: 1.5/3, 2.5/5, 3.5/7.5, 5/10

Dumping size:
R01 = 39Ω - 100W External resistor (opt)

Feedback:
EC = Commutation encoder (std)
SE = Serial Encoder (opt)
AE = Absolute Multiturn Encoder (opt)

Control Mode:
CD0 = Clock and Direction (std)
RD0 = Diff. analog reference (opt)
CB0 = Can Bus (opt)
ETC = Ether CAT (opt)

Specific number presence (opt):
S xxx
001÷999=specific number

Additional features:
0 0 0 0

EMC: Line Filter
0= Not Present (std)
1= Present (opt)

T: Tropicalized
0= Not Present (std)
1= Present (opt)

M3: Emulated Encoder
0= Not Present (std)
1= Present (opt)

STO: Safe Torque Off
0= Not Present (std)
1= Present (opt)

ABBINAMENTO DRIVE-MOTORE/*MOTOR-DRIVE COUPLING*

In fase di assemblaggio della macchina si raccomanda di eseguire il corretto abbinamento drive-motore. A tal proposito confrontare l'etichetta presente nel drive (vedi FIG.1) con il certificato di collaudo abbinato allo stesso drive. Nel certificato di collaudo sono presenti il codice e la descrizione del file di taratura caricato nel drive, nonché il motore da abbinare al drive (vedi FIG.2) / *During the machine assembly phase remember to correctly execute the proper drive/motor coupling. With this in mind, compare the drive label (see FIG.1) with the test certificate supplied with the drive. You will find on the test certificate the code and description of the adjustment file, along with the proper motor coupling for the drive (see FIG.2).*

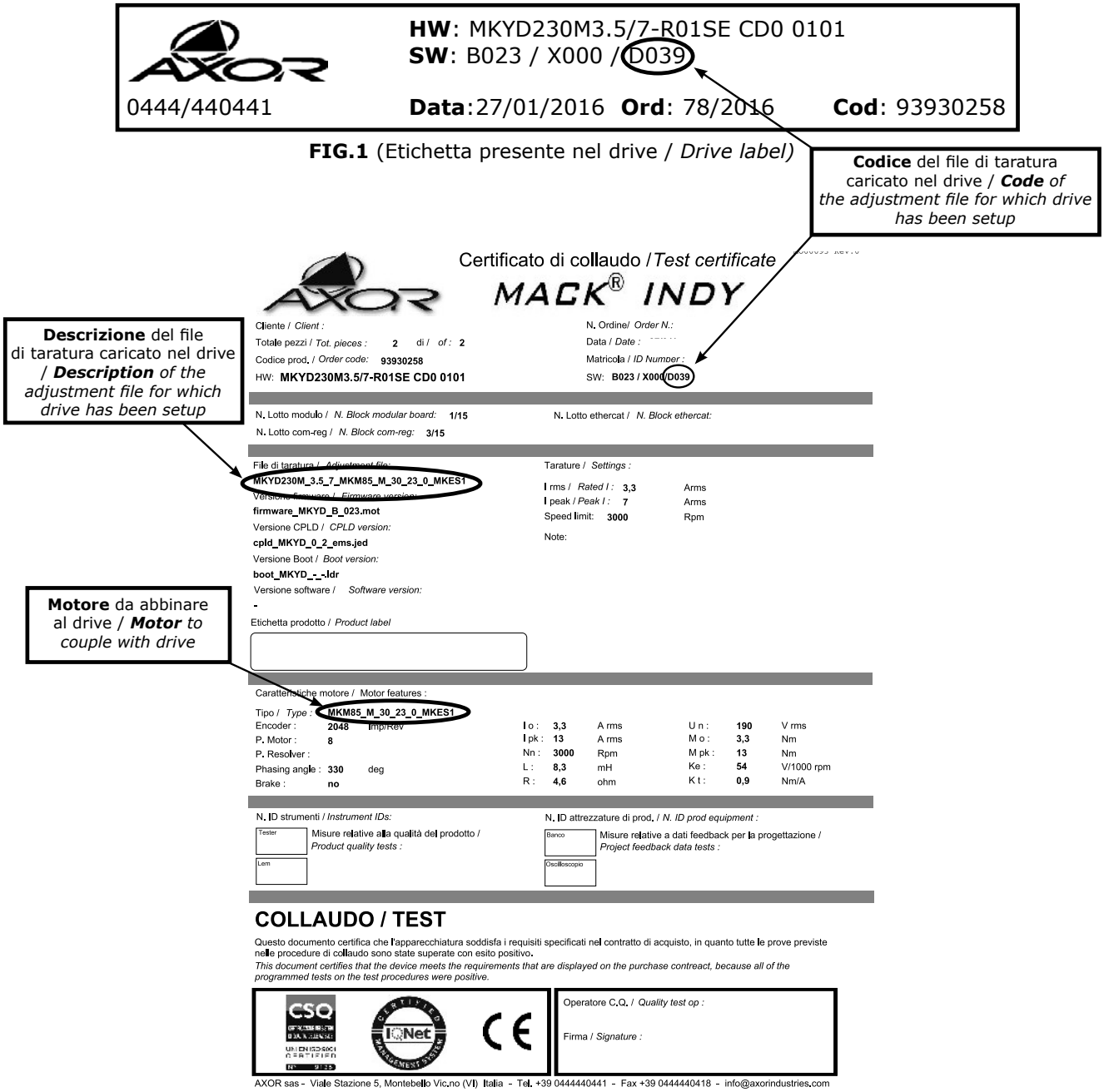

FIG.1 (Etichetta presente nel drive / *Drive label)*

FIG.2 (Certificato di collaudo / *Test Certificate*)

Nota/*Note*: Si raccomanda al cliente di archiviare il certificato di collaudo del drive e del motore / *It is recommended that the client retains the test certificate of both drive and motor.*

Chapter 2
Installation

2.1 General Advices

Transport

During the transport of the device respect the following indications:

- The transport must be made by qualified personnel.
- The temperature range must be between -25°C and +55°C [class 2K3 according to EN 60721-3-2].
- The max. humidity must be 85% (without condensation) [class 2K3 according to EN 60721-3-2].
- The system contains elements which are sensitive to electrostatic discharges. These elements can be damaged by careless manipulation.
  Discharge static electricity from your body before touching the converter.
  Avoid contact with material that insulates well (synthetic fibres, films of plastic material and so forth).
- We suggest to check the device condition at its arrival to survey eventual damages.
- Avoid shocks (the Mack® Indy has class 2M1 is according to EN 60721-3-2).

Storage

The unused drives must be storage in an environment having the following characteristics:

- temperature from -20°C to +55°C;
- max. relative humidity 85% (without condensation);
- max. time with the drive powered off (without supply connections): 1 YEAR.

After this time, before enable the drive, it is necessary activate the capacitors following this procedure: remove all electrical connections, then supply the input terminals of the supply with the main voltage (single phase) for 30 minutes.
In details power it by using a single phase supply equal to 110÷130VAC.

In order to avoid this procedure, we suggest to power on the drive with its rated voltage for 30 minutes, before the max. time is reached.

Maintenance

We recommend an accurate maintenance plane, according to using norms (for example CEI EN 60439-1).
In particular, we recommend the following:

- if the casing is dirty, clean it with isopropanol or similar;
- if the drive is dirty: the cleaning is reserved to the producer;
- **monthly clean drives from external dirt and dust deposits; pay particular attention on grids cleaning. If the grid is dirty, clean it by using a dry brush or an adequate air compressed jet. ADOPT ALL NECESSARY MEASURE TO AVOID DUST DEPOSITS INSIDE THE DRIVE.**

Disposal

The disposal should be carried out by a certified company.

2.1 General Advices

Security standard

• This manual is exclusively addressed to technical personnel with the following requirements:

- Technician with knowledge on movimentation of elements sensitive to electrostatic discharges (for the transport).

- Technician with appropriate technical training and with vast knowledge on electrotechnics/drive technical field (for the installation and operation of servodrives).

Using the drive incorrectly can injure people or damage things. Fully respect the technical data and indications on connection conditions.

• As well as the points described in this manual, current regulations regarding safety and accident prevention must be followed in order to prevent accidents and residual risks.

• The user must analyse possible machine risks and take the necessary measures to avoid injuries to people and damage to things because of unpredictable movements.

• The converters contains elements which are sensitive to electrostatic discharges. These elements can be damaged by careless manipulation.
Discharge static electricity from your body before touching the converter.
Avoid contact with material that insulates well (synthetic fibres, films of plastic material and so forth).

• During operation, the converter surface can become hot. Protect the user from accidental contact and keep the indicated distances from all objects.

• Never loosen electrical connections while the servoamplifiers are being powered.
The appropriate terminals of the drive must always be connected to earth as instructed in this manual. After having disconnected the converters from the supply current, always wait at least 5 minutes before touching the powered components (e.g. contacts) or loosening connections.

• Switch off the converter and wait at least 5 minutes before opening it. Remove the fuses or switch off the main switch before removing the drive. When opening, place the converter on a surface that does not belong to the electrical panel.

• The residual charges in the capacitors can remain at a dangerous level for up to 5 minutes after disconnection from the mains. Measure the voltage at the intermediate circuit (+AT/-AT) and wait until it is below 15V.

• The command and power connections can still hold current even when the motor has stopped.

• The **Mack® Indy** is equipped with electronic protections that deactivate it in case of irregularities. The motor, as a result, is not controlled and can stop or go into neutral (for a time determined by the type of system).

• During installation, avoid letting any residue with metallic components fall inside the drive.

2.1 General Advices

• Protect the **Mack® Indy** from excessive mechanical vibrations in the electrical box.

• Check that the main supply and the nominal current are coherent with the rating of the drive. Be sure that the voltage between the connectors L1-L2 is not greater than 10% of the nominal values. An excessively high voltage causes the breakdown of the load circuitry and of the drive.

• The **Mack® Indy** is equipped with an integrated **EMI anti-disturbance filter** at the 1-phase power supply input and with another EMI anti-disturbance filter at the Backup power supply input.
Being implicit to filter operation the deviation towards earth or mass of the undesired frequencies, ensure that these devices can produce leakage currents towards earth, which are measurable in milliAmpers.
Please remember that "leakage currents" must be considered when settings differential devices in order to avoid useless interventions.
For safety reasons connect the prepared terminal to earth before powering the drive. Incorrect connections make filter operation unreliable.

2.2 Positioning

The **Mack® Indy** is made to be fixed vertically to the **bottom of the electrical box** in order to guarantee reliable cooling, respecting the following distances:

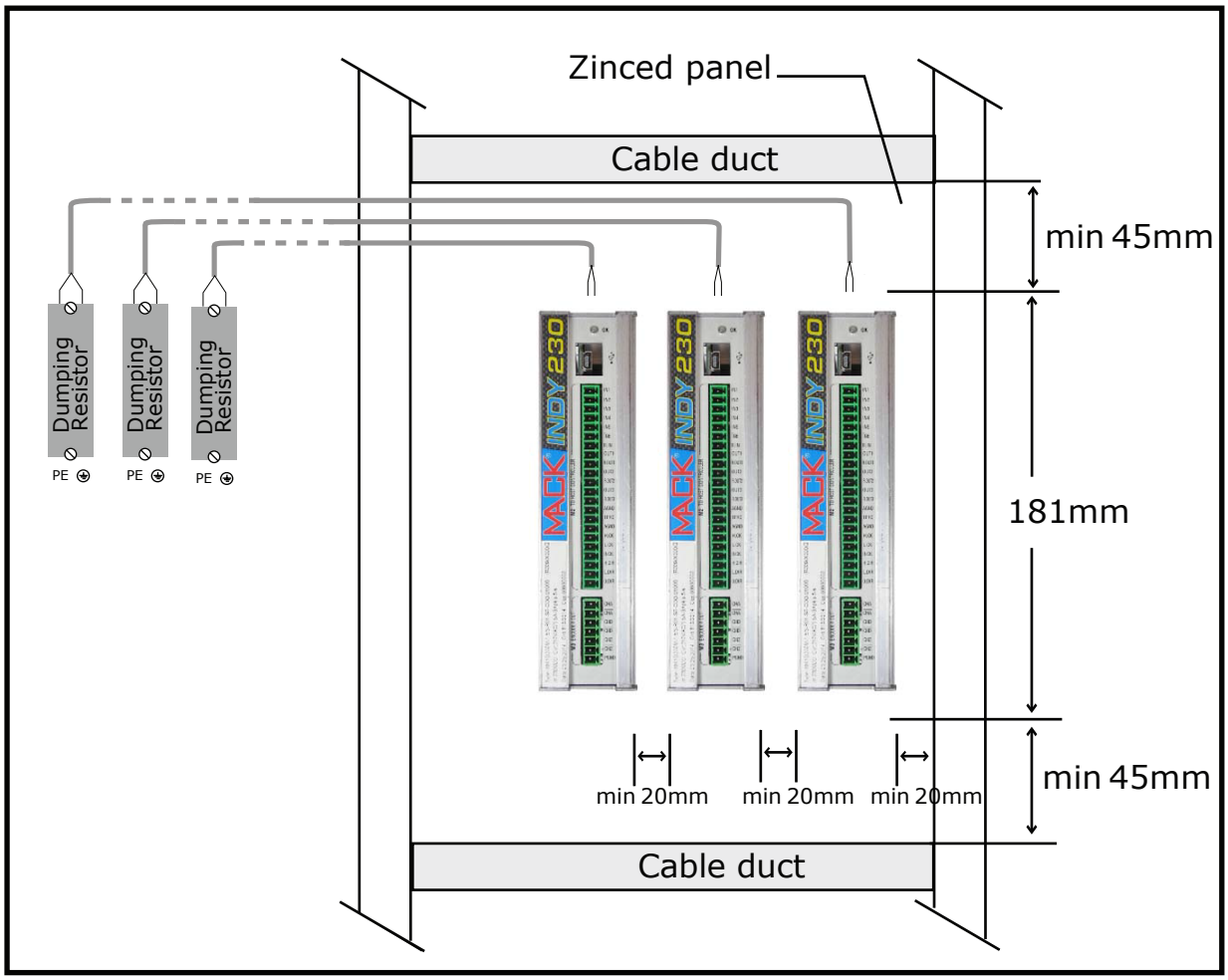

Notes:

•Arrange the power components (converters, main's filters, resistors, terminals, ...) in bins of the electrical panel different from those reserved to the command or control systems (PLC, PC, CNC, regulators, ...). This improves the level of immunity to interference of the system.

• **Fix the drives on a conductive zinced panel.**

• We recommend putting the drives **at least 20mm each other.**

• **Possibly connect the resistance externally to the zinced panel utilising two screws.**
If the above solution is not praticable, *connect the resistance inside the zinced panel, but as far as possible above the drives and isolated from the zinced panel.*
In both cases, if the cable length is greater than 20/30cm, it must be twisted and shielded. The shield must be connected to ground on both ends, utilising u-clamps.

2.3 Environmental conditions

During the storage and the installation respect the followings environmental conditions:

Environmental conditions	
Storage temperature	From -20°C to +55°C
Working environmental temperature	From 0°C to +45° C (no derating). From +45°C to +55°C the drive must be derated 2.5%/°C in reference to nominal and peak current.
Humidity	From 10% to 85% (without condensation)
Altitude	Up to 1000m without restriction. From 1000 to 2500m of altitude the converter must be derated in the output current of 1.5% every 100m.
Enclosure protection	IP20
Pollution level	LEVEL 2 (Norm EN60664-1) The drives are designed to be utilized in an electrical box protected against the infiltration of polluting agents such as water, oil, conductive dust and others.

Notes:

• The electrical box must have suitably **filtered air vents**.
Leave the necessary space both above and below the drives.
You must pay particular attention to the sizing of the (eventual) cooling system, remembering that the electrical box size and power internal dissipation of the drive(s) and braking resistors (if positioned inside of the electrical box).
Monthly control the functioning of the extracted air filter and cooling air fi lter of the electrical cabinet, in particular control the functioning and cleaning of fans and filters.

• **Monthly** check the internal cleaning of the electrical panel and defi ne an accurate cleanig plane, according to using norms (for example CEI EN 60439-1).

• **Monthly** check drive case and fans for excess dust or dirt, that could interfere with the correct dissipation of the drive; **in case of malfunctions contact Axor**.

2.4 Cables

The following table illustrates the technical characteristics of all cables:

Cables (as norm EN60204)		
Type	**Section**	**Notes**
for the Main Supply	**1.5**mm²/15AWG	**Always insert a power relay or a thermal magnet on every phase of the products power supply.**
for the Backup Supply	**1.5**mm²/15AWG	**Always insert a power relay or a thermal magnet on every phase of the products power supply.**
for the Motor's Power	**1.5**mm²/15AWG	It must be shielded. It must have a capacity of ≤150pF/m. In the configuration without filter, the cable can reach a maximum length of 10m. If the length exceeds 10m, insert an Axor **3x1.2mH filter**.
for the Control signals and I/O signals from PLC/CNC	**0.5**mm²/20AWG	See "2.6 Note about cable shielding"
for the Encoder signals	**0.25**-**0.35**mm²/ 22-24AWG	It must be shielded. It must have a capacity less than 120pF/m.
for the Encoder signals (serial encoder DSL)	**0.25**-**0.35**mm²/ 22-24AWG	Capacitance 800 ÷ 1000Hz : ≤90pF/m Characteristic Impedance at 10MHz : 110 ± 10 Ω
for external resistor	**1.5**mm²/15AWG	
for the system setting via SpeederOne interface	**-**	Mini USB B 5P to USB A type male. The cable length must be 3m max.

Notes:

• Avoid crossing, overlapping and twisting cables together. If it is absolutely necessary to cross them, do so at 90°.

• Use only copper conductors for cabling.

2.5 Connection to ground and earth

Make sure that the servodrive and the motor are connected to earth in accordance with the current norms.
This connection must be done by using a copper bar, mounted on insulating supports:

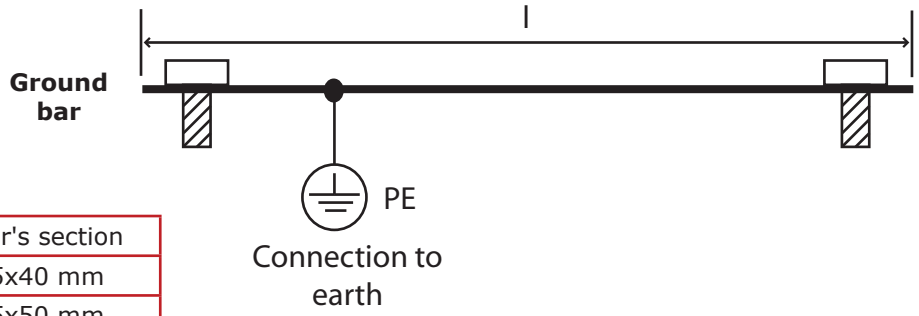

l	Bar's section
0,5 ...1 m	5x40 mm
1 ... 2 m	5x50 mm

then follow these indications:

1. **All yellow/green cables** used for ground connections must have **a section greater or equal** then the power one (according to norm CEI 64-8).

2. Connect to the ground bar:

   ✓ the **earth power terminal of the drives**;

   ✓ the **CHASSIS** of all drives;

   ✓ the **AGND** pin (**pin 14** of **M2** connector)

   ✓ the **internal zero voltage of the CNC**;

   ✓ the **earth terminals of the PLC/CNC frames**;

2. Connect the **ground bar** to the zinced panel of the drive by using a screw, then connect that screw to **earth**.

3. Connect earth to the **motor's carcass**.

4. Connect the shield of the **encoder cable** to ground by using an u-clamp if your Mack® Indy's have a Commutation Encoder (see "2.6 Note about cable shielding").

5. Connect the PE terminal of the motor **power cable** to the Mack® Indy's chassis by using the predisposed screw (see "2.6 Note about cable shielding").

2.5 Connection to ground and earth

The scheme below show the connection of ground and earth:

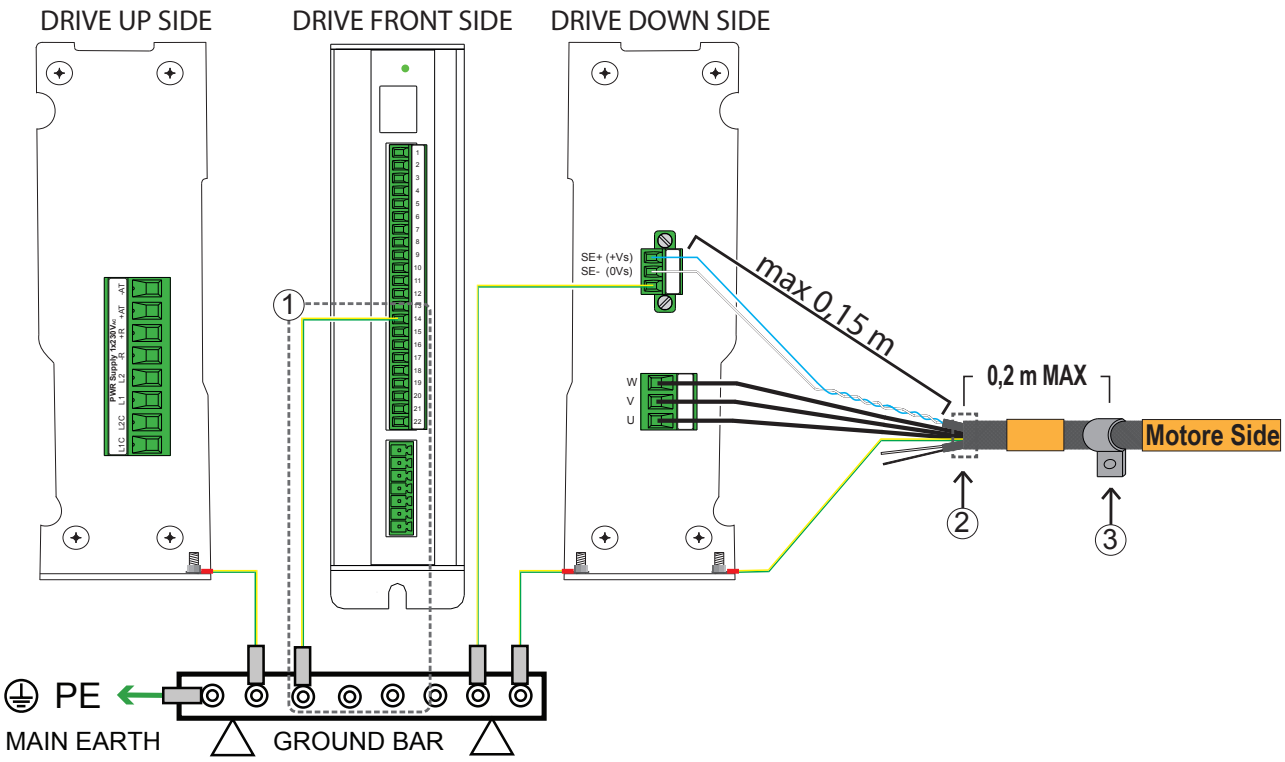

NOTE:

① **Connected when the feedback is Commutation Encoder.**

② **Internal and external shield are wrapped together.**

③ **Uclamp** (connect it to the cabinet's metal back plane PE ⏚).

2.6 Note about cable shielding

The table below illustrates the symbols used in the following pages:

Symbol	Description
	It suggests a conductive connection as much as possible to the chassis, or the heatsink, or the mounting panel of the electrical box.
	It refers to the earth connection.
	It refers to the connection of the shield to the connector's metal ring.

Control signal cables

The conductor of the analogic signal must be twisted and shielded, and the shield must be connected to ground remove the outside sheath and affix the shield to the zinced pannel by using an u-clamp.

• To reduce the capacitive and inductive coupling, these cables must be run keeping a distance of more than 30cm from the power cables (10 cm if they are shielded).

• If it is absolutely necessary to cross the control cables with the I/O's, do so at 90°, in order to reduce the effect of the magnetic fields.

Motor cables

The shield of the motor cable (power and signal cables) are connected as follows:

• *drive side* (0,2 m) ⇨ remove the outside sheath and fix shield to the zinced pannel, by using a u-clamp:

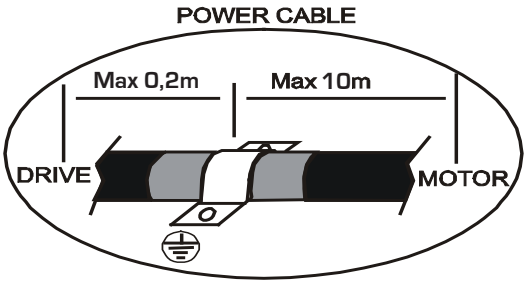

2.7 Base installation procedure

This procedure must be done only by qualified personel which are familiar with drives. If you need more information contact Axor.

a) **Power off** all the supplies of the electrical box.

b) Verify:
✓ the **drive-motor coupling** ⇨ the stall current (I_o) of the motor should be equal to/or greater than the nominal output current of the drive;
✓ the **positioning** of the drive into the electrical box;
✓ the **pollution level** and the **ventilation**;
✓ the **connection to earth** of the electrical box where the drive is installed (see "2.5 Connection to ground and earth").

c) Execute the wiring following this order, avoiding that wiring's pieces, cables, wires, screws, conductive objects, etc. do not enter into the drive through its slits:

1- First connect **the ground bar to earth**.

2- Connect the **cables for the motor's power** (U, V, W) and the **filter 3x1.2mH**, if the cable length is greater than 10m.

3- Connect the **earth of the motor's power** (PE) to the Mack® Indy's chassis by using the predisposed screw and, if necessary, connect the cables of the electromechanical brake and the cables for the brake supply (0/+24Vdc)..

4- Connect the **external shield** of the motor's cable: it must be shielded utilising a u-clamp to the zinced panel of the electrical box (see "2.6 Note about cable shielding").

5- If an **external braking resistor** is used, connect it between pins **+R** and **-R** of the Mack® Indy's **M1** connector with a cable as short as possible (max 30cm). If the length of the cable is greater than 20cm , then the cable must be twisted and shielded, besides the shield must be connected to ground on both ends utilising u-clamps to the zinced panel of the electrical box. Insert the F fuse.

6- Connect the motor's feedback cable.

7- Connect the **earth cable** (PE) and the main power supply cable (L1-L2) in the Mack® Indy.
Always insert a fuse F2 (see chapter 1.3 "Technical Data") or a power protective swich on every phase of the products power supply.

8- Connect the **backup supply cable** in the Mack® Indy.
Use an external power supply, isolated from the main supply and insert the fuse **F1 (see chapter 1.3 "Technical Data")**.

9- Connect the PC to the Mack® Indy utilising an **USB** cable. The cable length must be 3m max.

10- Supply the drive with the **backup supply** and then the **main supply** following the *procedure* illustrated at the end of the chapter.

11- Open the *Speeder One* interface and set the prefered operative mode before to give any signal to the drive .

12- Execute the tests on the drive and the motor.

In the following page there is an *example of a basic connection*.

2.8 Example of base connection

Example of BASE connection:

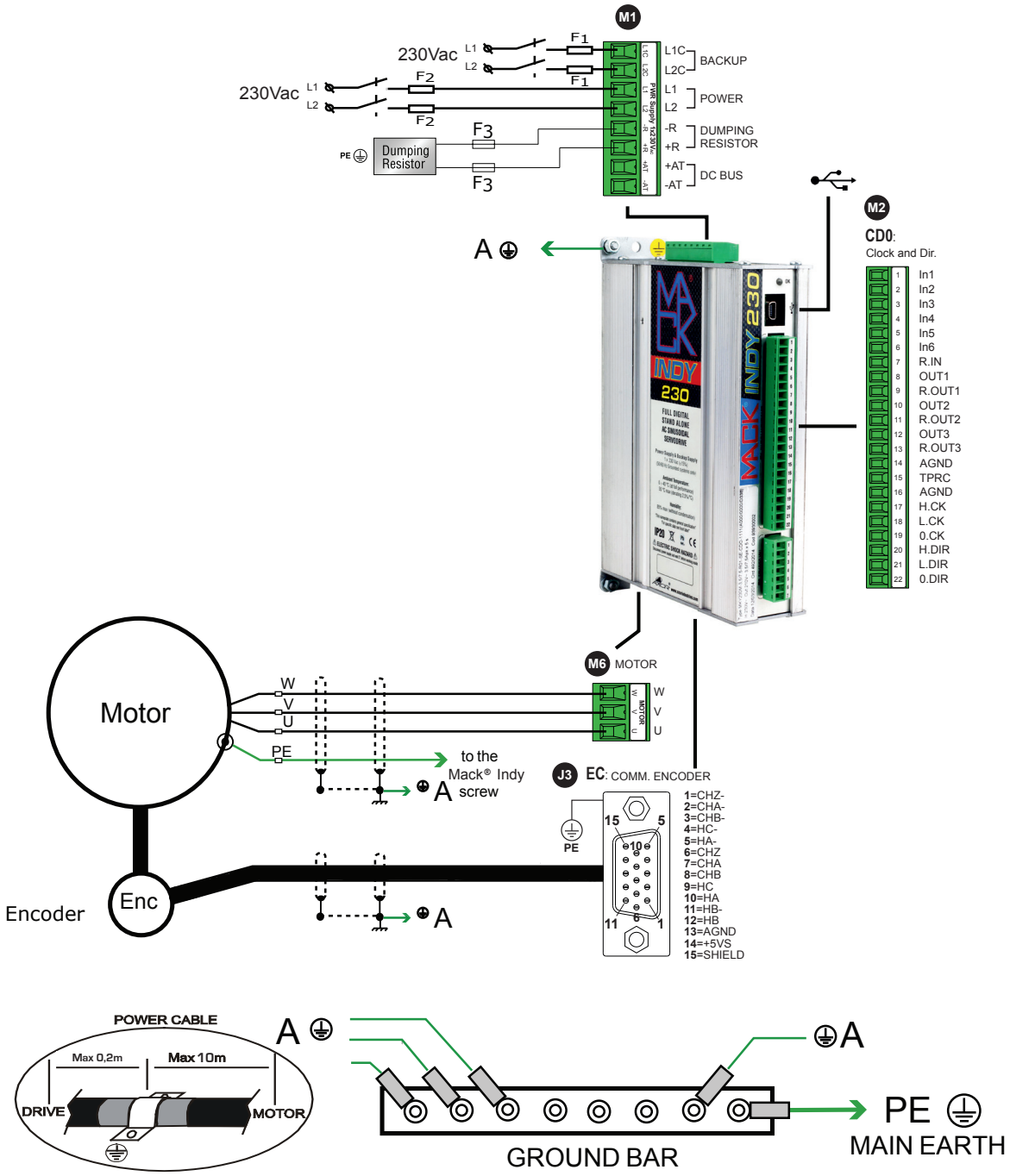

2.9 Supply connections

BACKUP SUPPLY

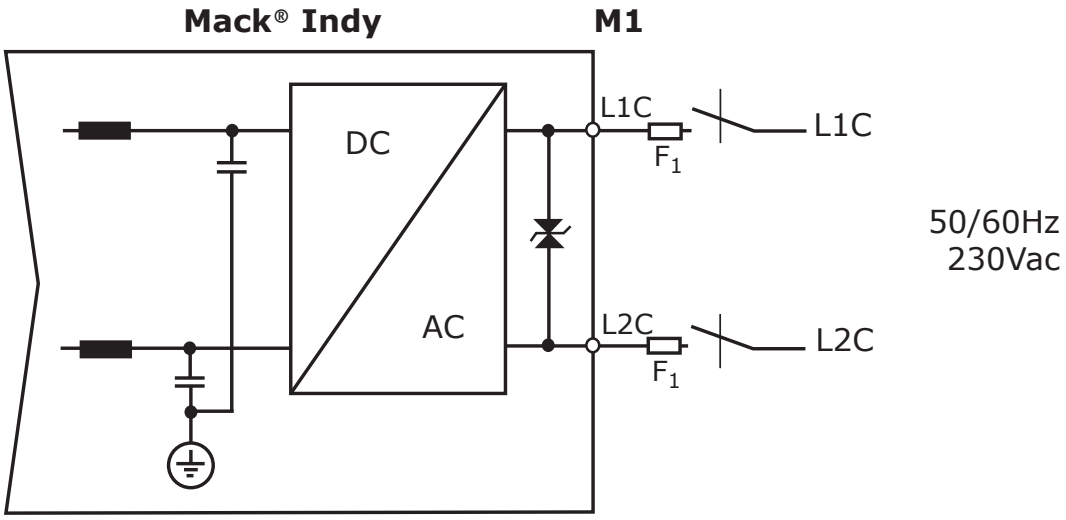

Note:
- Accepted voltage: **230Vac** (±10%);
- We suggest to insert the **F_1** fuse (see "Technical Data" in chapter 1);

POWER SUPPLY

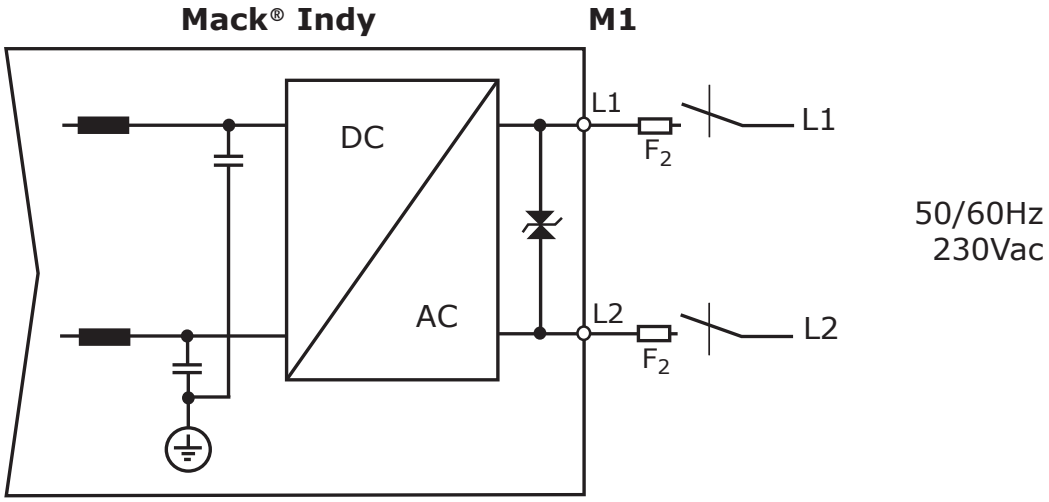

Note:
- We suggest to insert the **F_2** fuse (see "Technical Data" in chapter 1);
- **Always insert a power relay or a thermal magnet on every phase of the products power supply.**

2.10 Motor power connection

MOTOR POWER

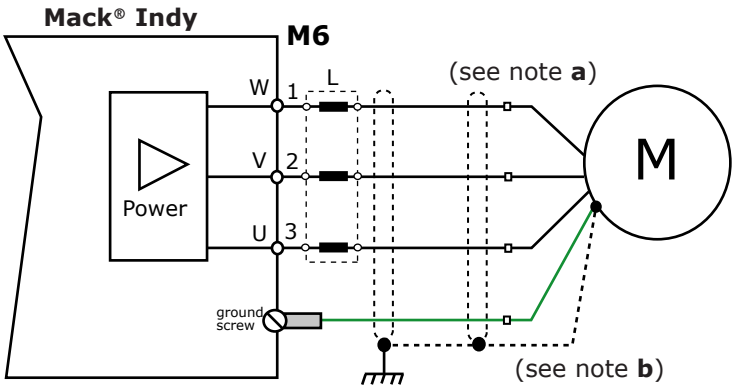

FUNCTION	(MM²)	WIRE COLOR	MARK
U MOTOR	0.35	BLACK	1
V MOTOR	0.35	BLACK	2
W MOTOR	0.35	BLACK	3

Note:
a- Use **3x1.2mH - 20Arms** filter series for connections with cables longer than 10 meters.

b- The **earth connection** of the power cable's shield must be made on the zinc-coated panel (using a u-clamp) near the drive (0,2 m). Motor side: the shield is connected to connector's metal ring, so it is connected to ground through motor's carcass.

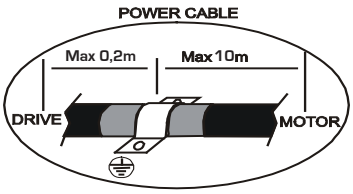

2.11 Regen resistance connections

EXTERNAL REGEN RESISTANCE connection

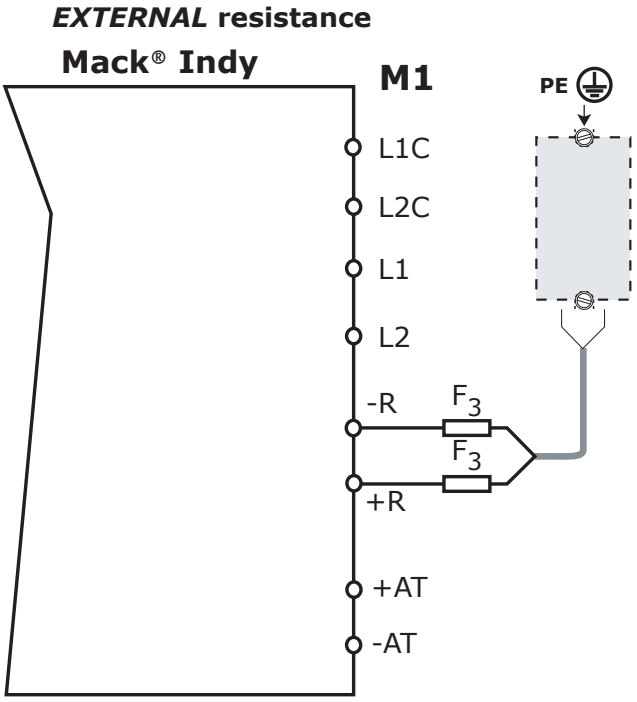

It is possible to use one external resistance: **39Ω - 100W**;
The cable must be as short as possible (max 30cm).
The resistances must be connected to the zinced pannel utilising two screws.
If the cable length is greater than 20cm, it must be twisted and shielded. The shield must be connected to ground on both ends, utilising u-clamps to the zinced panel of the electrical box.

Notes:
- The temperature of the zinced panel of the electrical box can be higher than 200°C.
- Do not mount the resistor on surfaces which can be damaged by heat.
- If the resistor is mounted externally, protect it.
- Respect the distances and shieldings illustrated in Fig.1.
- We suggest to insert the $\mathbf{F_3}$ fuse (see "Technical Data" in chapter 1);

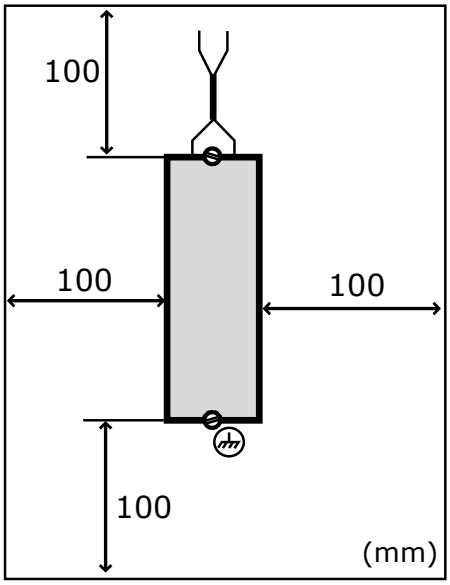

Fig.1

2.12 Analog inputs connection

ANALOG DIFFERENTIAL OR COMMON MODE INPUTS (+/-REF)

DIFFERENTIAL MODE

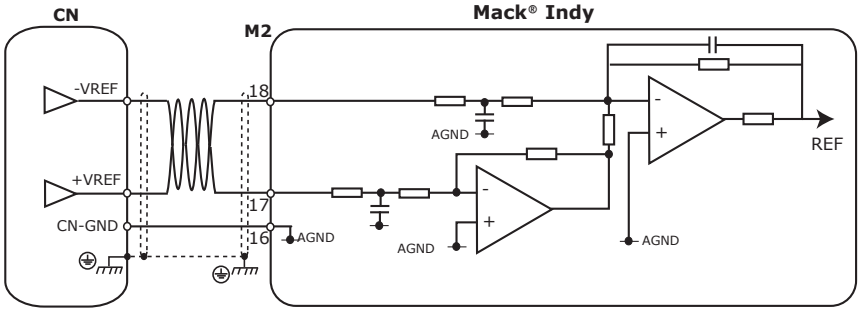

COMMON MODE

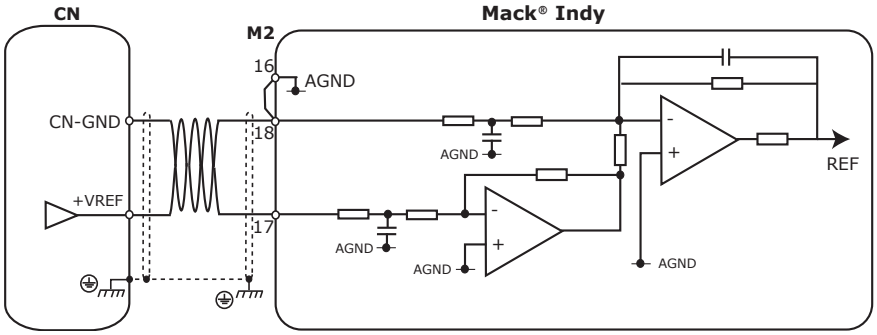

The **technical characteristics** of these inputs are as follows:

- ✓ Voltage: 10V Max Diff.
- ✓ Input impedance: 50k ohm.

To change the sense of rotation, apply the positive voltage reference to **M2-18**, or change the **Rotary Direction** parameter in the **Speed** window (from **Positive** to **Negative**).

Note: We suggest connecting the shield on both sides.

ANALOG COMMON MODE INPUT (Tp.RC) used as torque analog reference

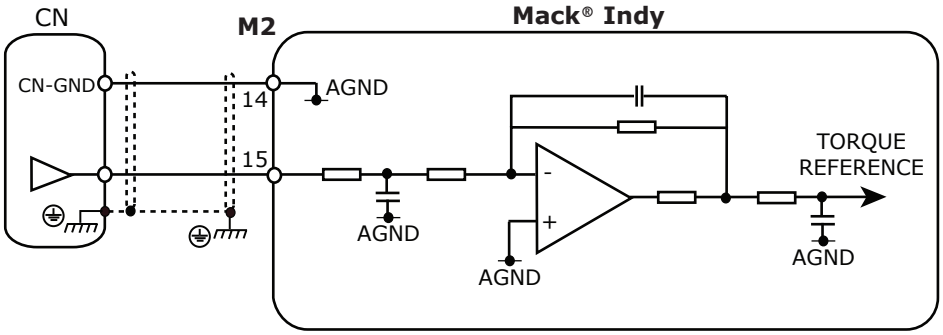

The **technical characteristics** of Tp.RC input are as follows:

- ✓ Voltage: ±10V Max.
- ✓ Input impedance: 25k ohm.

Note: We suggest connecting the shield on both sides.

2.13 Digital inputs connection

DIGITAL INPUTS connection

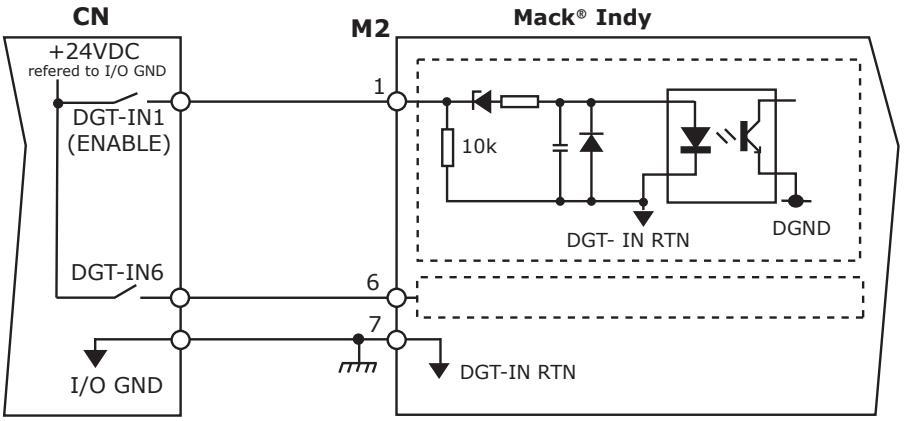

Note:

• The enable signal should be +**24VDC-7mA** (PLC compatible). The enable range is between **+14V Min** and **+30V Max**; they are disabled with a voltage less then **+5VDC max**.

• The **M2-1** terminal (**DGT-IN1 (ENABLE)**) is used only as the drive's enable. If **M2-1** is **HIGH (+24VDC)** the Mack® Indy is enabled (without active alarms and if start up sequence, illustrated on paragraph 2.21, is respected); if **M2-1** is **LOW (0V)**, the motor is without torque.
ATTENTION: THE MACK® INDY'S ENABLE/DISABLE, BY USING THE ENABLE INPUT, IS NOT CONSIDERED A SECURITY FUNCTION.

• The **M2-6** input is used for reset the "resettable" alarms.

2.14 Digital outputs connections

DIGITAL OUTPUT Connection (example)

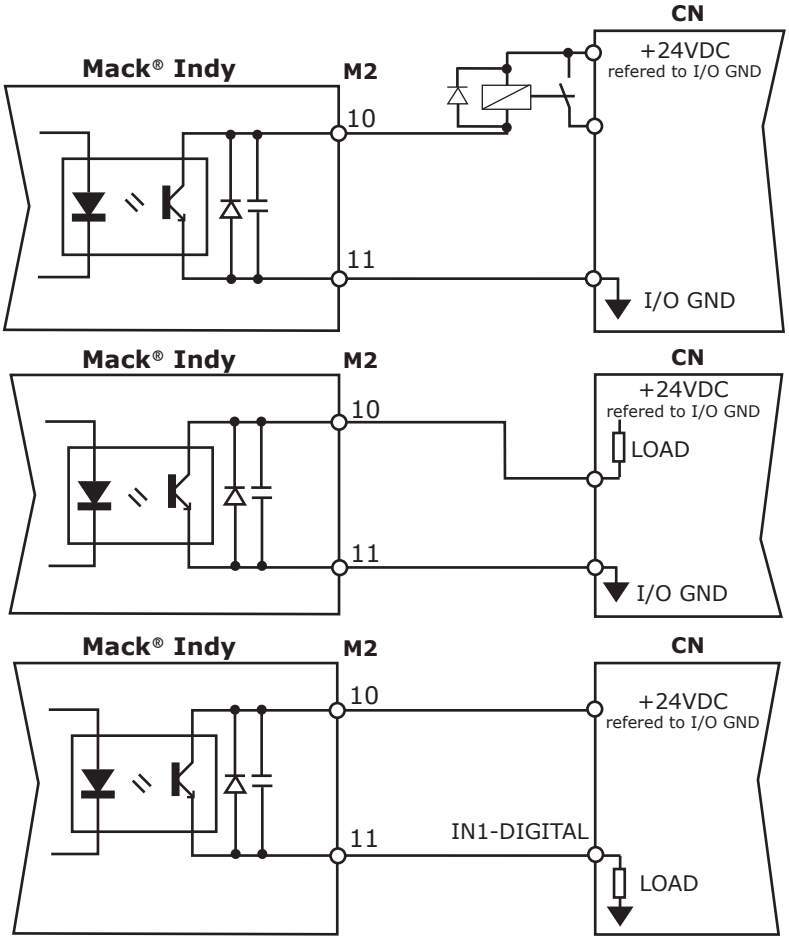

Max. load for each output:
-DIG.OUT 1 - 2 = 15[mA]
-DIG.OUT 3 = 120[mA]

Always use a relay with a diode in parallel.

2.15 Clock/Dir inputs connections

CLOCK/DIRECTION MODE connection

5V Line Drive control

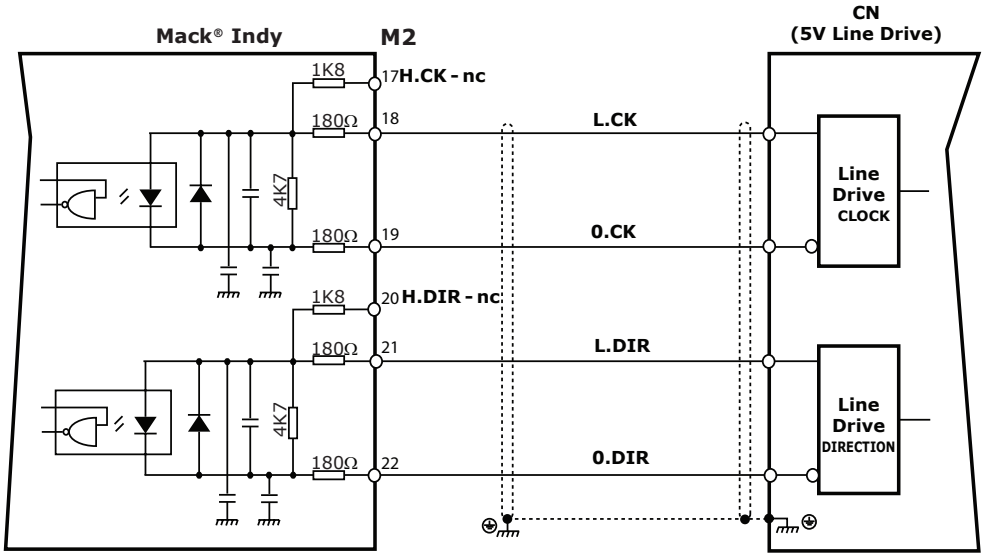

5V Push Pull control

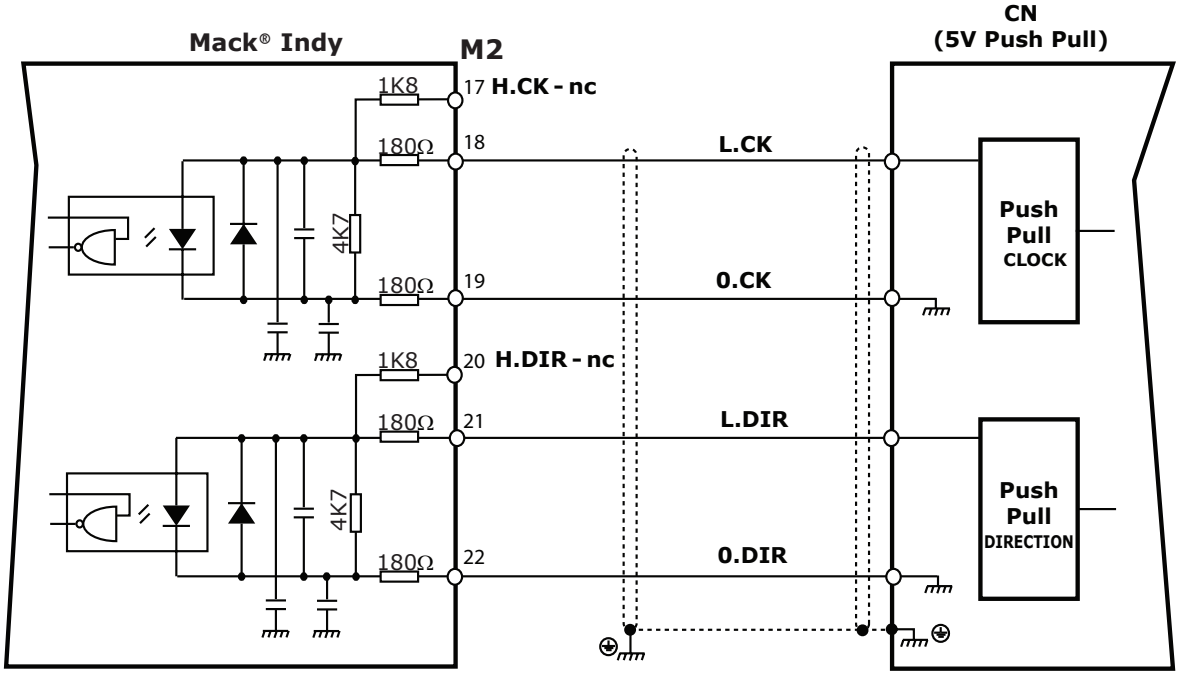

2.15 Clock/Dir inputs connections

5V Open Collector control

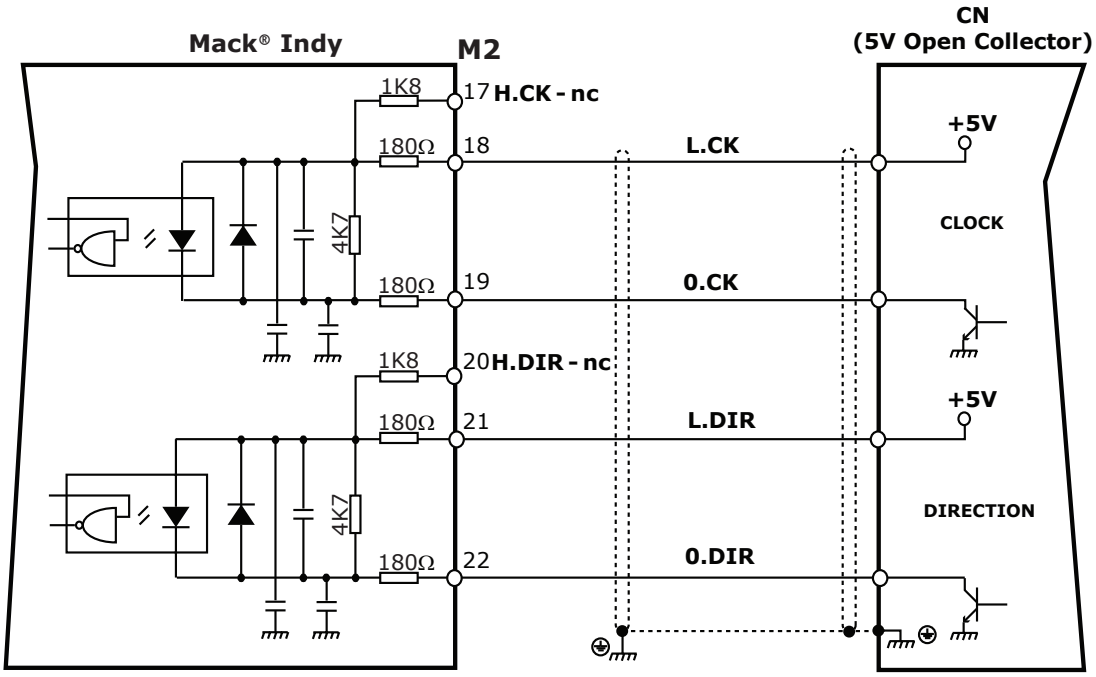

24V Open Collector control

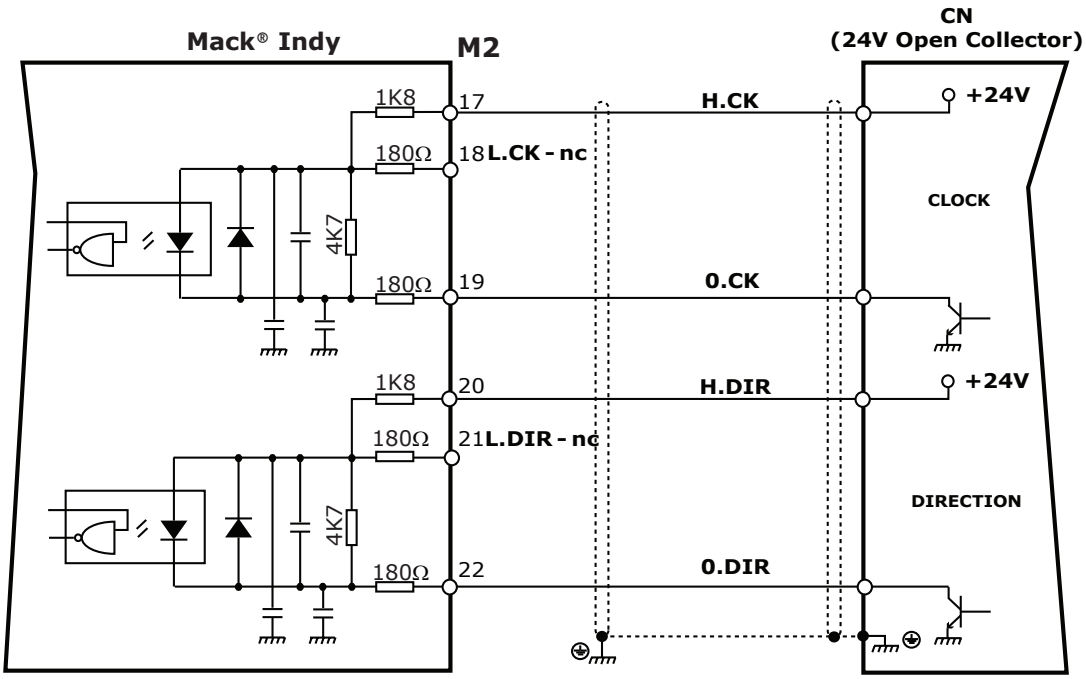

2.15 Clock/Dir inputs connections

24V PNP control

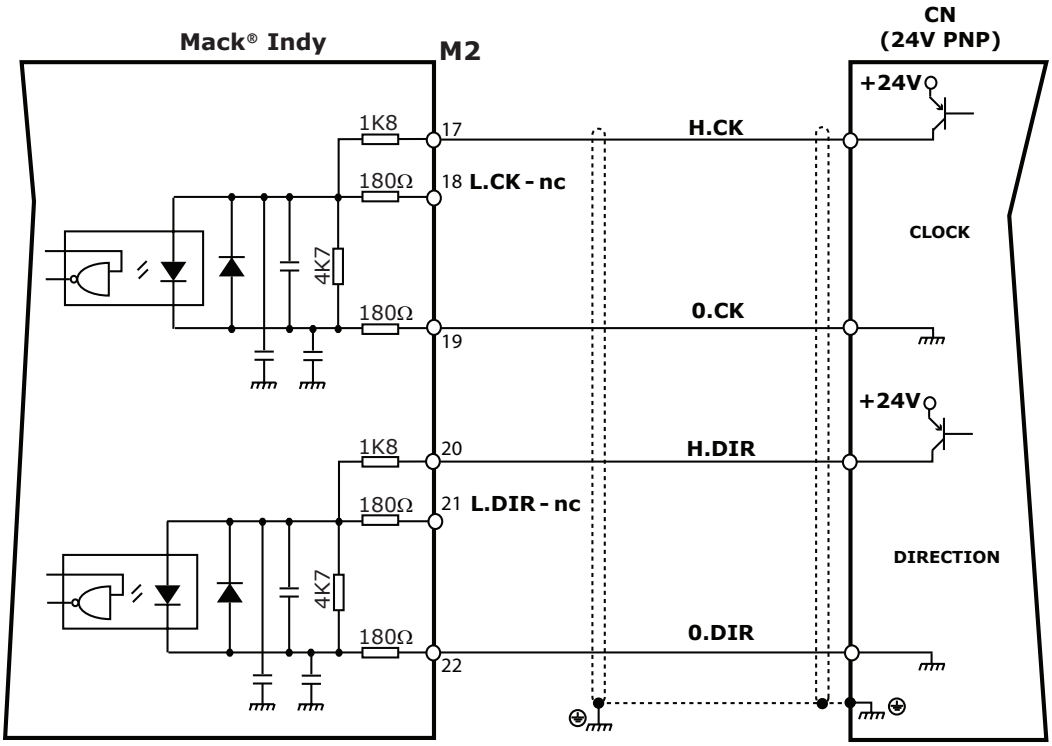

GEARING MODE connection (5V signal)

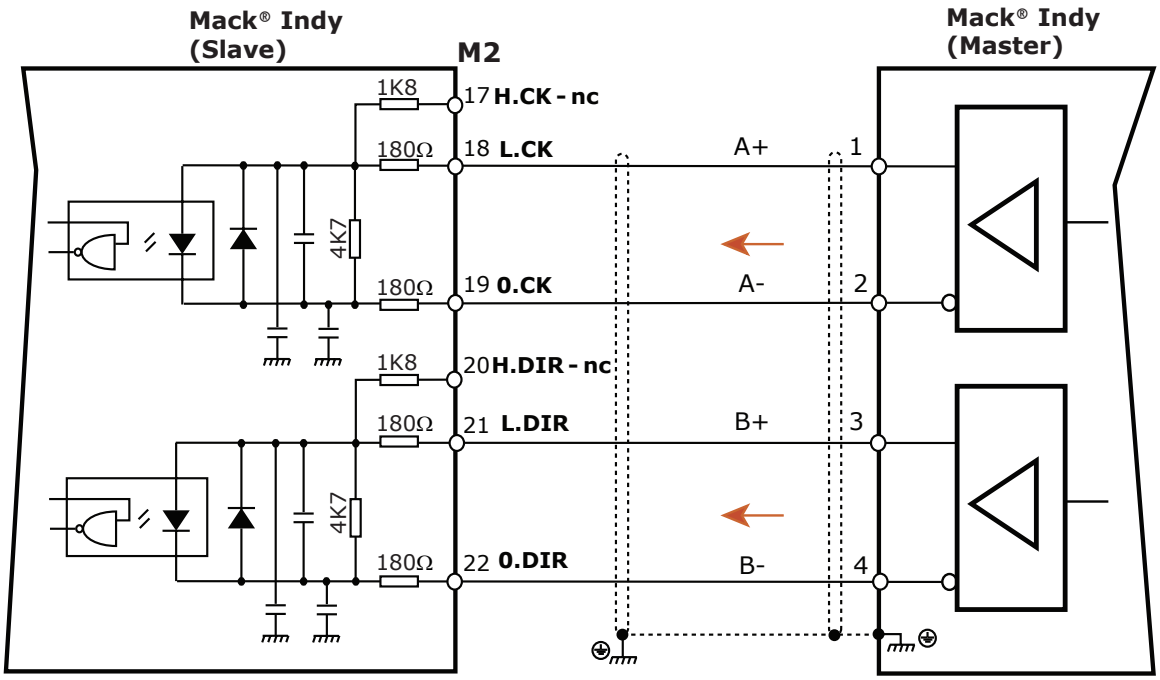

2.15 Clock/Dir inputs connections

GEARING MODE connection (24V signal)

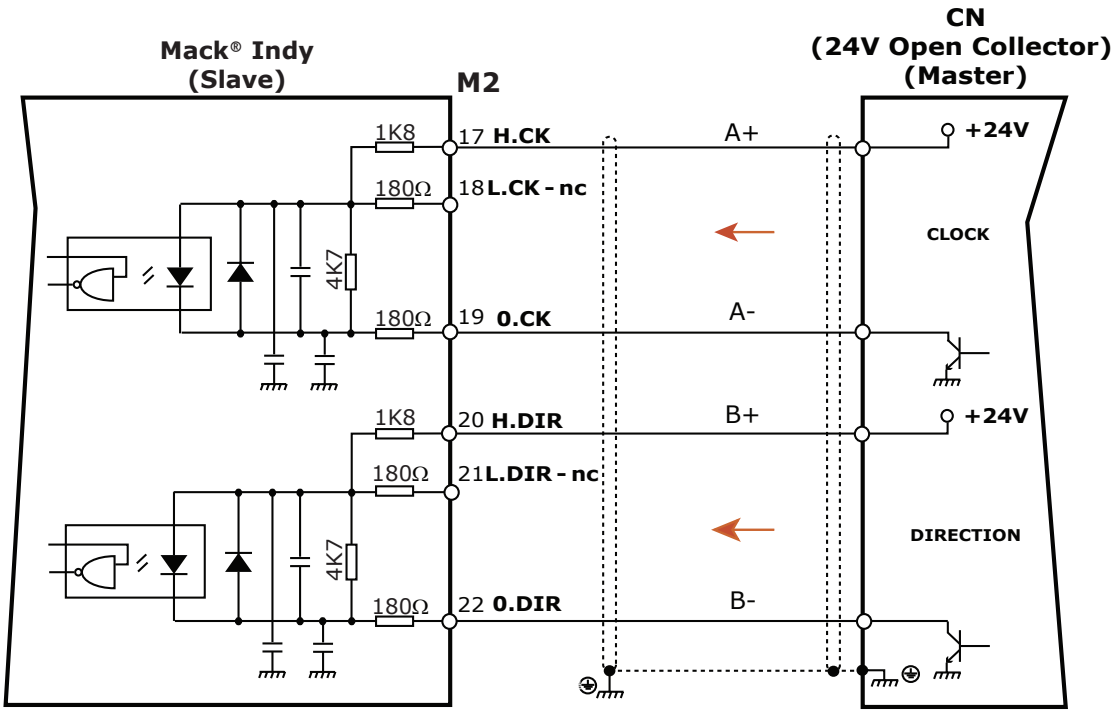

Note: In all cases we suggest connecting the shield on both sides.

2.16 Feedback signals connections

COMMUTATION ENCODER FEEDBACK connection

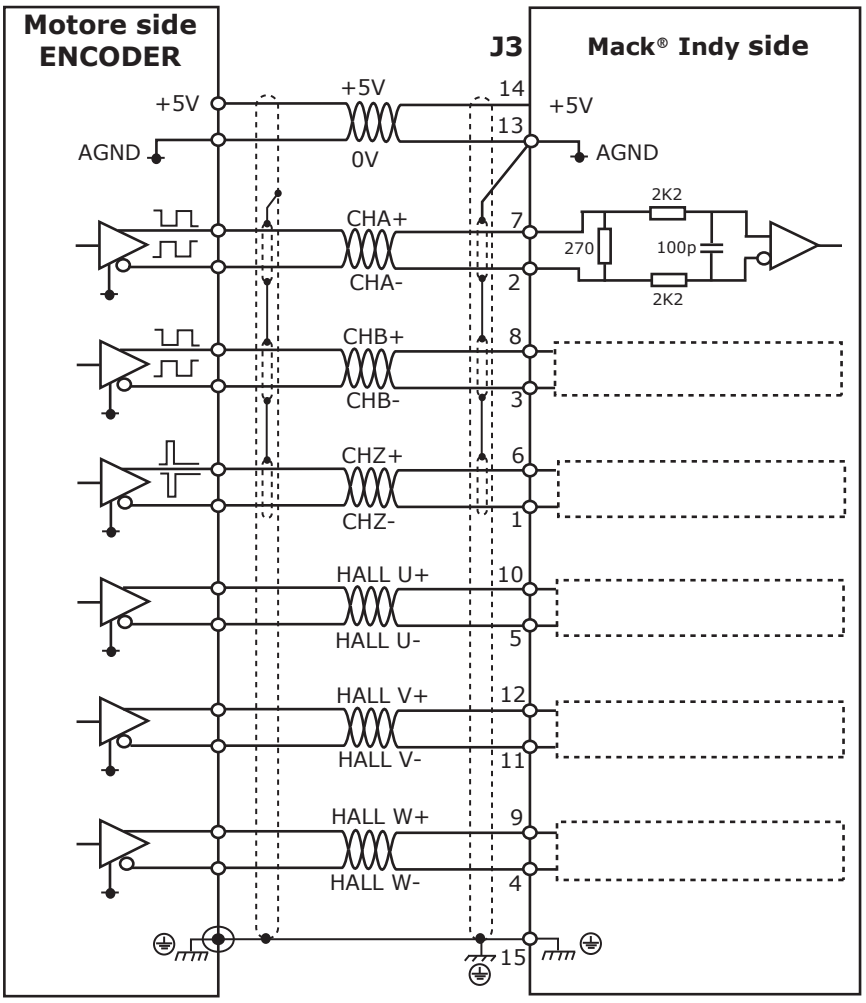

J3 connector
Sub-HD 15 pole

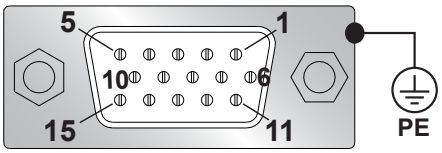

SERIAL ENCODER FEEDBACK connection

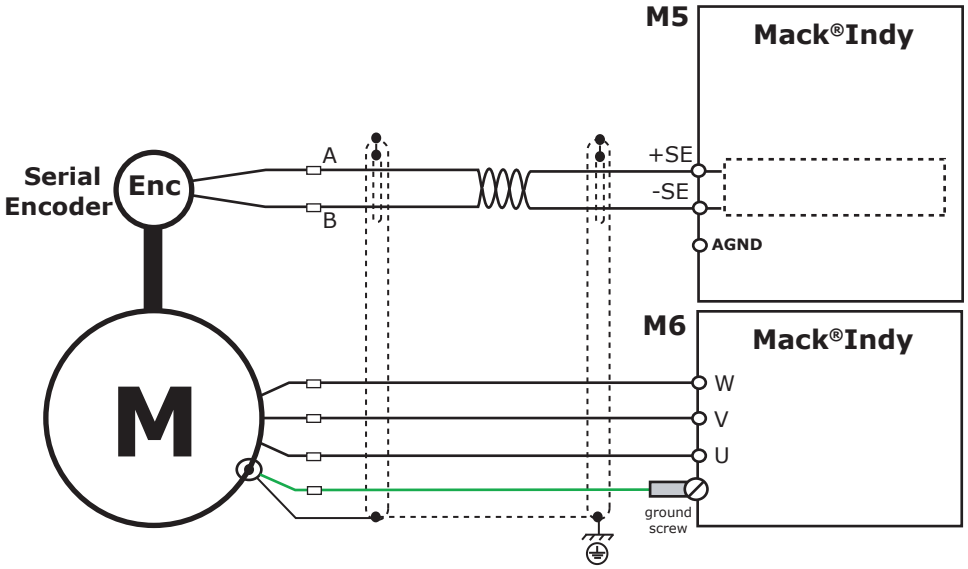

FUNCTION	(MM²)	WIRE COLOR
+SE	0.25	BLU
-SE	0.25	WHITE

2.17 CanBus connections

CANBUS connection

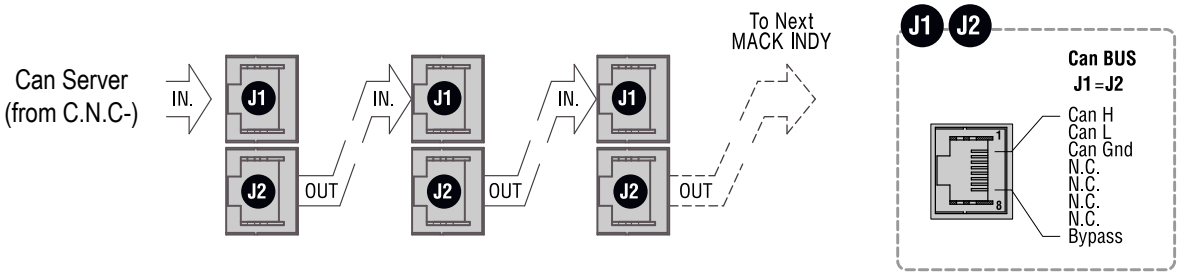

Notes:
- Connect a **RESISTOR** (**120 Ohm**, 1/4W) between pins **1** and **2** of the **J2** connector of the last drive.
- On request Axor provides the RJ45 cable and the terminal resistor.

2.18 EtherCAT connections

EtherCAT connections

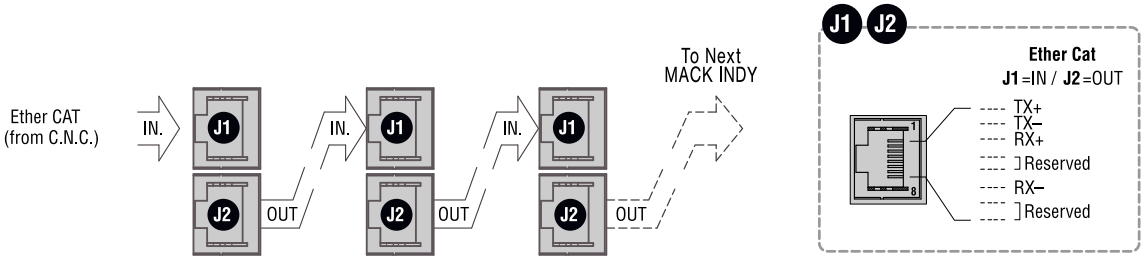

2.19 Mack® Indy power up

The power up of the **Mack® Indy** must be done following this diagram, in order to save the drive and the electrical box:

1) Power the drive utilising the auxiliary supply.

2) After **1sec.** power the main supply.

3) After **500ms** the DGT-OUT1 is enabled.

4) After **100ms** it is possible to enable the drive utilising the "Enable" key or the DGT-IN1 digital input.

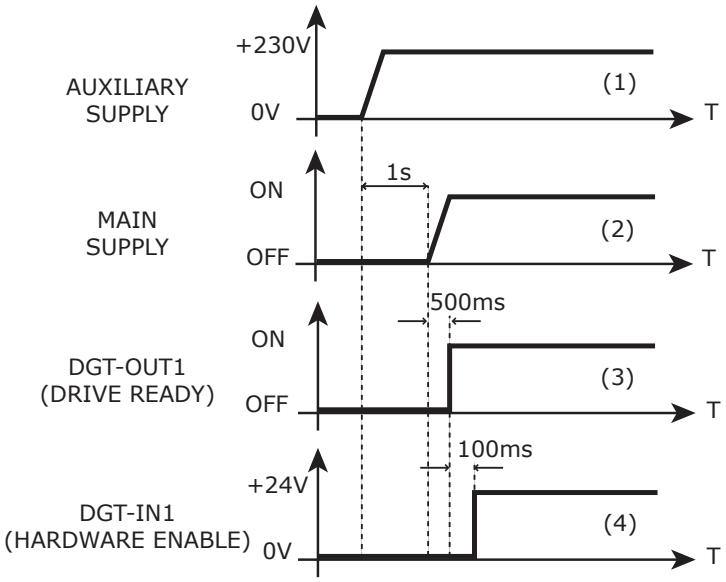

Attention: If the DGT-IN1 (ENABLE) digital input is enabled by the CN before powering the drive (A), after powering the drive utilising the auxiliary supply and the main supply, it is necessary disable and enable the DGT-IN1 input (B), in order to enable the INTERNAL ENABLE. If the DGT-IN1 is not disabled , then re-enabled, the INTERNAL ENABLE remains disabled and the user cannot execute any movement.

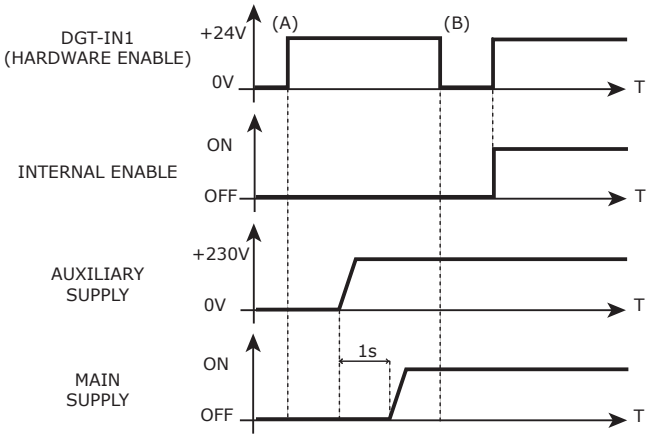

Attention: If the digital input DGT-IN1 (ENABLE) is enabled by the CN after powering the drive utilising the auxiliary supply, but before powering the drive utilising the main supply (C), it is necessary to disable and then re-enable DGT-IN1 input (D), in order to enable the INTERNAL ENABLE also. If the DGT-IN1 is not disabled then re-enabled, the INTERNAL ENABLE remains disabled and the user cannot execute any movement.

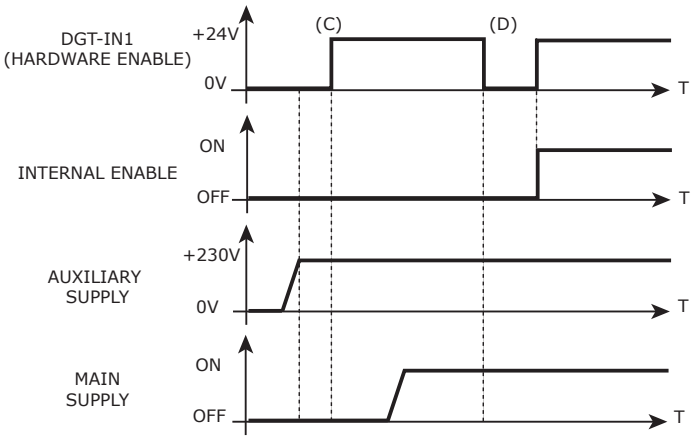

2.20 Motor Test

This procedure is a guide line for the first power up of the drive-motor system. **It must only be executed by technically qualified personnel. If you need more information contact Axor.**

1) Follow the basic procedure previously described. **ATTENTION: do not apply load to the motor.**

2) Install *Speeder One* interface from CD.

3) Power up the drive: apply the auxiliary supply and then the main supply (follow the procedure previously described).

4) Open the *Speeder One* interface clicking on "Axormb.exe" executable file on directory: "C:\Programm\Axor". The main window "**Axor Servo Drive**" and the "**Select Driver**" windows open simultaneously. Clicking OK on the "Select Driver" window, the **Axor Speeder One** in connected to the drive.

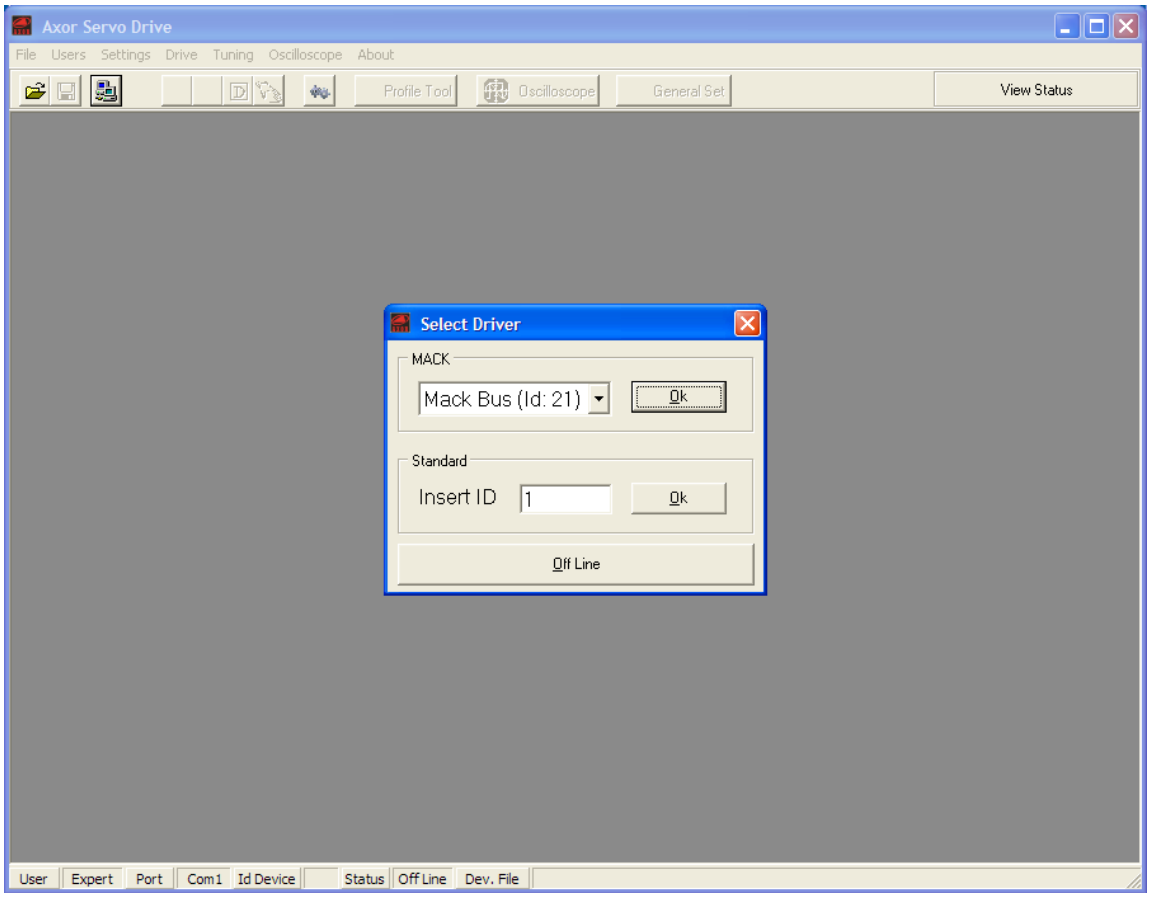

5) If the drive is "**Not configured**", it is necessary to open a pre-set connfiguration file, following this procedure:

- in the main window select the "**File**"menu and then "**Open**";
- in the directory: ...\Axor\Data\Devices\ select a file reference to the coupling drive-motor, then click on "**Open**";
- save load parameters by using "**Save Data To EEPROM**" icon.

If the drive is *configured for a specified motor*, it is sufficient to check these parameters:

- ✓ Main voltage (*Main Voltage* menu in the main window of the interface)
- ✓ Number of motor poles (*Motor* window)
- ✓ Feedback type(*Motor* window)
- ✓ Irms current(*Current* window)
- ✓ Ipk current (*Current* window)
- ✓ Speed Limit (*Speed* window)

2.21 Status Led

In the **MackIndy** there is a **LED** (red or green, fixed or blinking) that visualises the systems' status:

COLOR	STAEO	CAUSE
No color	-	The MackIndy is off.
(Green - Red)	Alternating and Blinking	There is only the auxiliary supply.
(Green)	Blinking	The MackIndy is ready.
(Green)	Fixed	Il MackIndy is enabled and there is no alarm.
(Red)	Fixed	There is an alarm.
(Red)	Blinking	There is I2t alarm (alarm 6).

Chapter 3
Diagnostic

3.1 Alarms

The table below illustrates all the message errors:

	ALARM	SOLUTION
AL1	**EEPROM alarm** Error while memorising parameter to the drive's EEPROM.	Try to memorise the parameters to the device's EEPROM with the button "Save data to Eeprom" in SpeederOne interface.
AL2	**Overcurrent alarm** Short circuit between U, V, W or towards earth.	Disconnect the power, verify the motor wiring, then power up again.
AL3	**Drive Temperature alarm** Heat sink temperature too high, is >70°C.	Disable the drive, verify: • the forced ventilation functioning (if present), • the ambient temperature, wait until the radiator has cooled off, reset the alarm then enable the drive.
AL4	**Hall alarm** This alarm comes on if one or more of the hall cell's wires are disconnected.	Disable the drive, verify the cell's wire connection, reset the alarm, then enable the drive.
AL5	**Encoder alarm** This alarm comes on if one or more of the encoder channels are interrupted.	Disable the drive, control the connections, reset the alarm, then enable the drive. If the alarm persists contact Axor.
AL6	**I^2t Drive alarm** The internal I^2t function has reached the maximum permitted. The cause could be one of the following: • the working cycle could be too heavy; • a possible mechanical block; • motor phase inversion; • the electronic brake is not unblocked; • the amplifier's dynamic costants: "KP", "KI" and "KD", could create useless current oscillation.	This does not cause the disabling of the drive's functioning.
AL7	**Motor Temperature alarm** Heat sink temperature too high.	Disable the drive: • control the heat sink temperature; • decrease the dynamic constant if the motor is vibrating. This situation causes current oscillation and consequently the overheating of the motor. Wait until the motor has cooled off, reset the alarm, then enable the drive.
AL8	**Regenerative Resistance alarm** The value I^2t energy recovery has reached the maximum allowed.	Disable the drive: • check the AC power supply input; • check that the working cycles are not excessive; • verify if the motor, going at half speed, shows the same problem. Reset the alarm, then enable the drive.
AL9	**Minimum Voltage alarm** Minimum converter voltage.	Disable the drive, wait until the DC power supply voltage reaches the correct threshold, check the AC power supply input, then enable the drive.
AL10	**Pre-Alarm Recovery alarm** 80% of the I^2t energy recovery value has been reached.	Check the AC power supply input and the working cycles. This is a visual alarm, it anticipates the intervention of the "Maximum recovery" alarm.

3.1 Alarms

ALARM		SOLUTION
AL13	**Overvoltage alarm** Maximum converter voltage.	Disable the drive, check the AC power supply input, then enable the drive.
AL14	**Following Error** The error between the position reference and the position feedback exceeds the "Max Position Error" parameter, because the "Max Position Error" parameter is too small, or the dynamic gains of the velocity-positioning loop are wrong.	Disable the drive, check the **Max Position Error** parameter, check the dynamic gains, reset the alarm, then enable the drive.
AL15	**Limit Switch** The two fixed limit switches have both been disabled or interrupted.	Disable the drive, check the limit of the limit switches and external connections, then enable the drive.
AL17	**Overcurrent regen resistance circuit** Possible short-circuit in the regen resistance circuit. This causes the opening of the Relè OK contact and the disabling of the functioning.	Power off the drive, control the short-circuit, then power on the drive.
AL19	**In-rush Bus** Indication of the drive's in-rush phase or the lack of the main supply.	This message disappear when the drive is powered.
AL22	**STO** Malfunction in the Safe Torque Off safety function or wrong sequence.	Verify the presence of the STO signals (STO+ and STO-) applied on M4 connector. Verify the correct sequence of application of the STO signals and the Enable signal. If the alarm persists contact Axor.
AL23	**Flash Alarm** Errors in reading/writing parameters on the Flash memory, or Flash memory is empty.	Disable the drive, save new values, then re-enable. If the problem persists contact Axor.
AL31	**Unsuported Operation** The operating mode selected is not supported.	Disable the drive, change the operative mode and save in Eeprom.
AL32	**SpeedFollowing Error** The motor is rotating at a higher speed then the required.	Verify the phasing angle, if the problem persists, contact **Axor**.

Chapter 4
Operative Modes

4.1 Operative Mode

Mack® Indy support the following operative mode:

CONTROL	DESCRIPTION
DIGITAL SPEED CONTROL	It is **speed piloting** utilising a digital reference.
ANALOG SPEED CONTROL	It is **speed piloting** utilising an analogue reference (differential or common mode).
DIGITAL TORQUE CONTROL	It is **torque piloting** utilising a digital reference.
ANALOG TORQUE CONTROL	It is **torque piloting** utilising an analogue reference.
GEARING	It is possible to pilot the drive with the quadrature signals of an emulated encoder from a Master drive or with the quadrature signals of an incremental encoder from a Master motor (**Electrical Axis** or Gearing).
PULSE/DIR	It is possible to connect the drive to a **stepper-motor controller**, piloting it with the H.CK/L.CK/0.CK and H.DIR/L.DIR/0.DIR signals (Pulse/Dir Mode).
CW/CCW	The motor is piloted with a pulse signal applied on the input **H.DIR/L.DIR/0.DIR** or **H.CK/L.CK/0.CK** to get rispectively the rotation of motor in clockwise direction or counter-clockwise.
CANBUS	The drive can be configured and controlled using Can Bus. It supports the following **Can Open** protocols: • part of the **DS301-V4.02** • part of the **DSP402-V2.0**
ETHERCAT	The drive can be configured and controlled using **EtherCAT.**
SQUARE WAVE	The motor is piloted with a "square wave" signal or with two digital programmable quote. This is useful for adjustments of the speed loop.
ANALOG to POSITION	The motor moves between two programmable positions corrisponding the min and max voltages at the dedicated pins.

4.2 Digital Speed

Axor digital drives can control a motor by using a ***speed digital reference***.

The procedure is the following:

1- Perform the *basic installation procedure* and *the motor tests* previously illustrated;

2- Enable digital speed control via ***Speeder One interface:***

a- set the operative mode ***1:Digital Speed***;
b- insert the desired speed reference [in rpm];
c- save settings by clicking on icon "**Save data to Eeprom**";
d- enable/disable the drive by using the **Enable**/**Disable** buttons.
e- is possible limit the torque by setting the % on Imax by the value Torque Sat.(the value 0,0% disable this function).

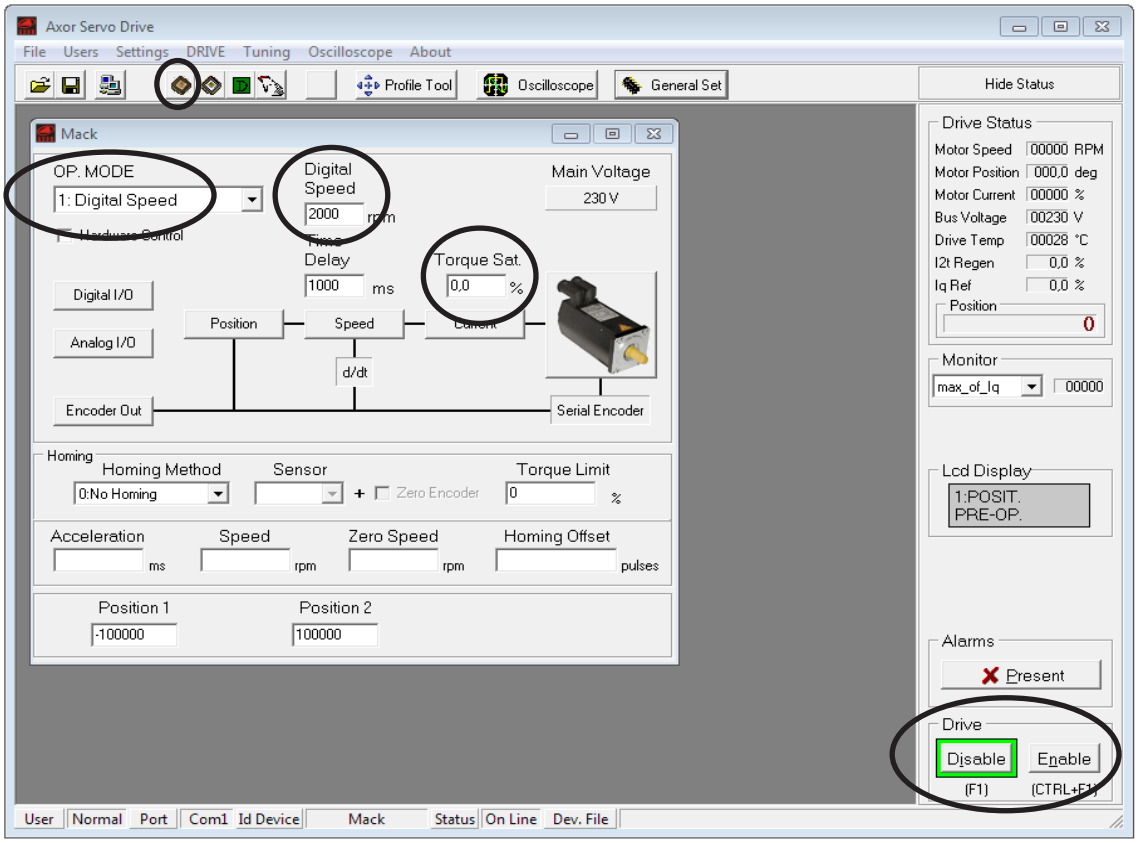

3- If the turning is irregular or noisy, it should be necessary to *adjust the gains of the speed loop* by using an adeguate procedure.

4.3 Analog Speed

Mack® Indy can control a motor by using a **differential or common mode analog speed reference from the CN or PLC.**

The procedure is the following:

1- Perform the *basic installation procedure* and the *motor tests* previously illustrated;

2- Use pins **+REF**, **-REF** and **AGND** to *apply the desired speed reference* ⇨ the axis card used in the Numerical Control or PLC can have two different types of analog reference outputs:

- **differential analog output**, in this case connect the positive speed reference to **+REF** and the negative speed reference to **-REF**.

DIFFERENTIAL MODE

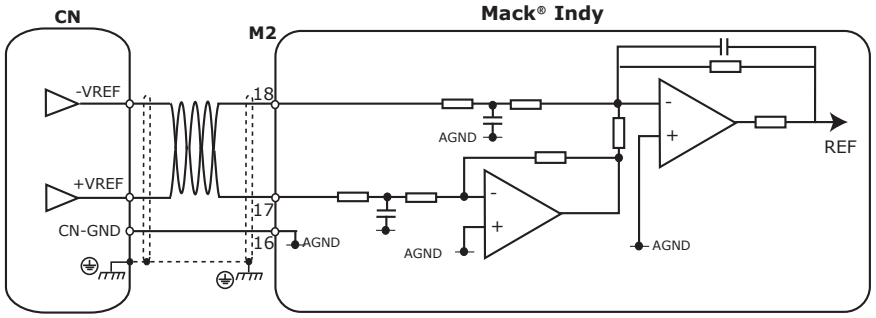

- **common mode reference analog output**, in this case connect the control's analogue output either to the **+REF** terminal or to the **-REF** terminal, depending upon the required rotational direction. Then connect the **AGND** to the reference input terminal that is NOT used.

COMMON MODE

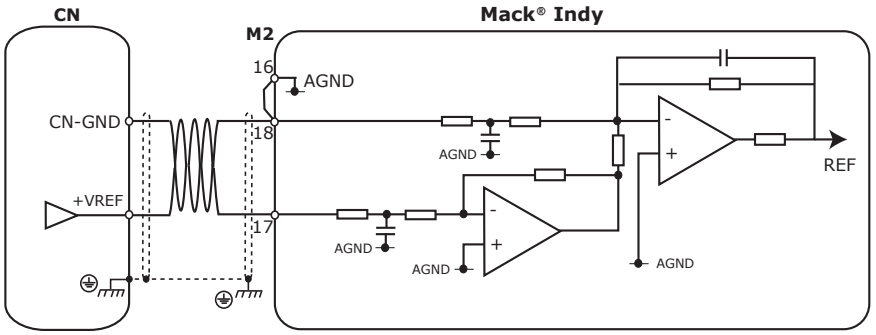

Notes:

✓ To change the sense of rotation apply the positive voltage reference to **-REF**, or change the **Rotary Direction** parameter in the **Speed** window (from **Positive** to **Negative**).

✓ We suggest to connect the shield on both sides.

3- Connect the emulated encoder outputs of the drive to the CN:

- if the CN has ***LINE RECEIVER*** inputs, follow these connections:

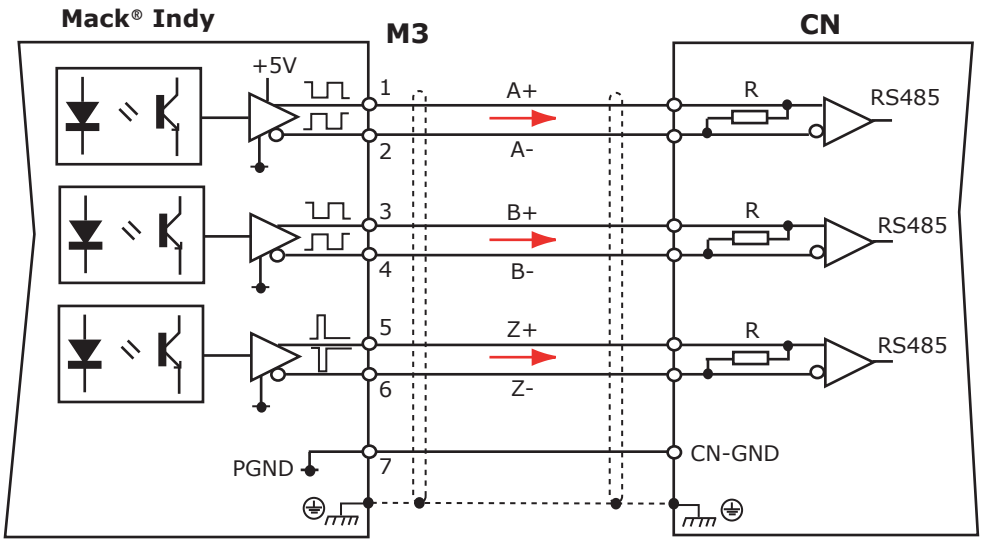

- if the CN has ***COMMON MODE*** inputs, follow these connections:

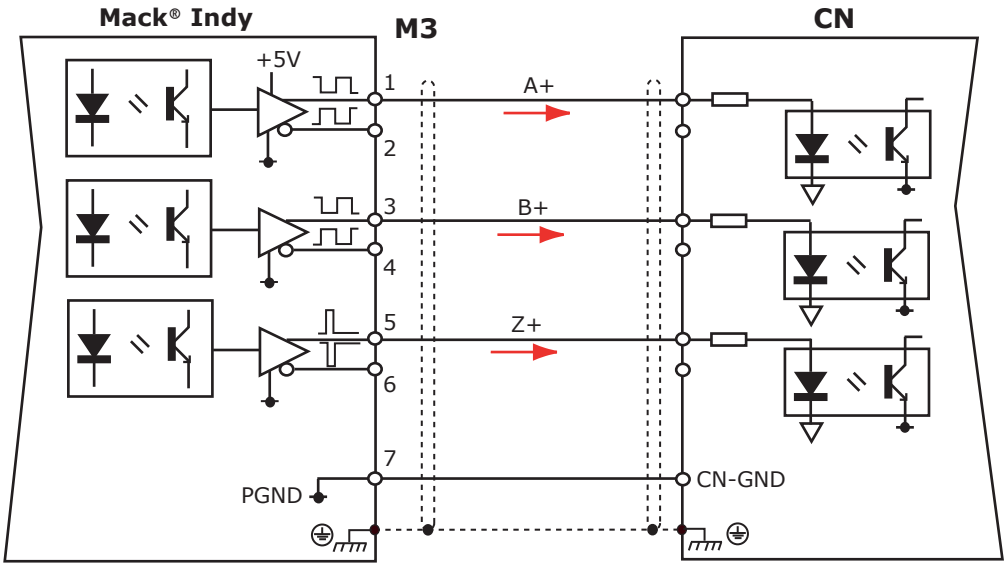

Note: We suggest connecting the shield on both sides.

4- Set the desired pulses per turn on emulated encoder outputs by ***Speeder One interface:*** open the "**Encoder Out**" window and select the desired pulses per turn:

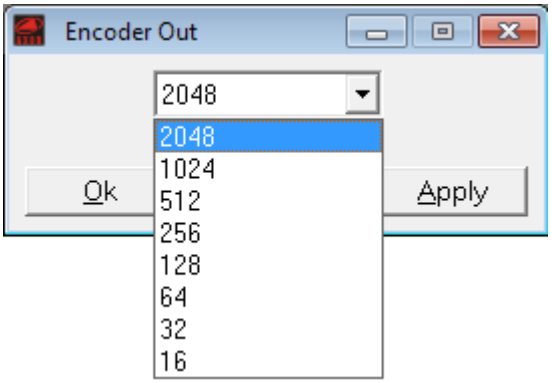

5- Execute the *settings of the offset of the velocity analog input reference* ***via Speeder One interface***: open the "**Analog I/O**" window and click on the **Analog 1** icon.

6- Enable analog speed control via ***Speeder One interface***:
- a- set the operative mode ***0:Analog Speed*** and keep the **Torque Sat.** box to **0,0**(Off);
- b- save settings by clicking on icon "**Save data to Eeprom**";
- c- enable/disable the drive by using the **Enable**/**Disable** buttons.

7- If the rotation is irregular or noisy, it should be necessary to *adjust the gains of the speed loop* by using an adequate procedure (contact Axor).

4.4 Digital Torque

Mack® Indy can control a motor by using a digital torque reference.

The procedure is the following:

1- perform the *basic installation procedure* and the *motor tests* previously illustrated;

2- enable the control via ***Speeder One interface:***

a- set the operative mode **3:Digital Torque**;

b- insert the desired torque reference(*) in the window Torque Sat., then click enter ↵;

c- save all settings by clicking on icon **Save Data to Eeprom**;

d- enable/disable the drive by using the **Enable**/**Disable** buttons.

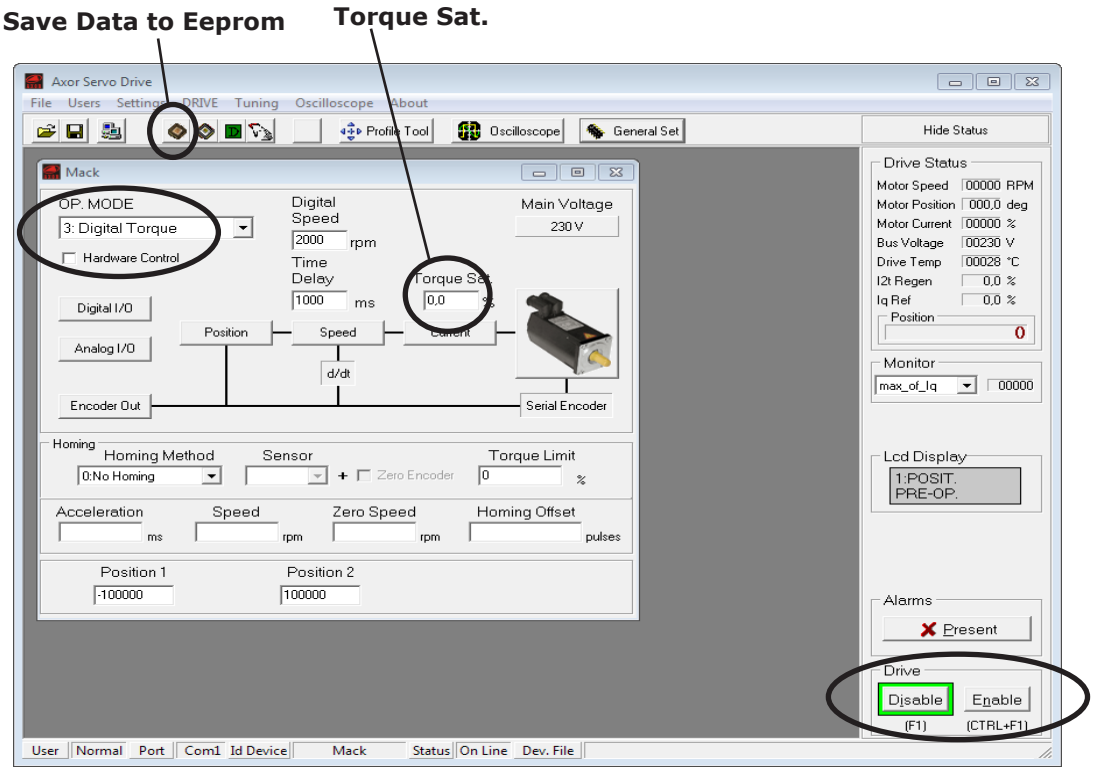

(*) Insert the calculate torque reference using this formula:

$$\frac{I_{desired} \times 100}{I_{peak}}$$

Example: Suppose we want to set a digital torque reference equal to 5A, having a drive size of 10/20 (10A=rated current, 20A=peak current) ⇨ insert in the window Torque Sat. the value 25, in fact (5x100)/20=25.

The value 0,0% disable the function.

4.5 Analog Torque

Mack® Indy can control a motor by using an **analog torque reference**.

The procedure is the following:

1- Perform the *basic installation procedure* and the *motor tests* illustrated in the Drive's Service Manual;

2- use pins **TPRC** and **AGND** to apply the desired torque reference (using a common mode signal equal to **+/-10V**):

Connection scheme:

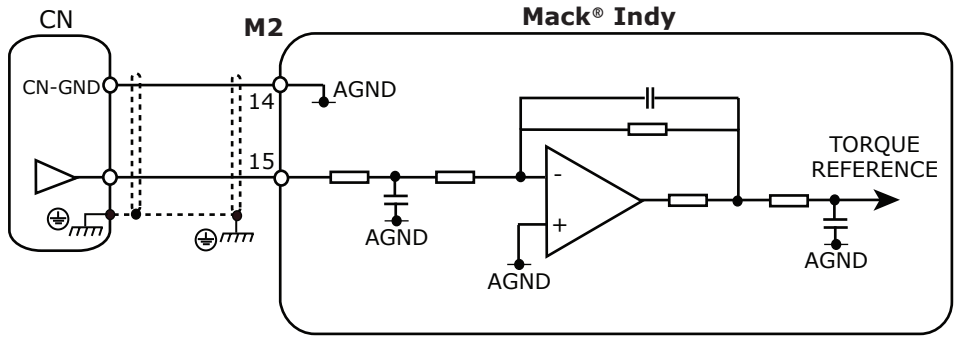

The formula for determining the voltage value to be applied in TPRC in order to obtain the necessary current is as follows:

$$V_{TPRC} = \frac{10 * (+/-)\ I\ desired}{I\ peak}$$

3-Execute the *settings of the offset of the analog torque input reference* ***via Speeder One interface***: open the "**Analog I/O**" window and click on the **Analog 2** icon.

4- enable the control via ***Speeder One interface***:

a- Set operative mode "**2:Analogue Torque**":

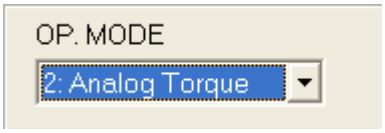

b- save settings by clicking on icon **Save Data to Eeprom**;

c- enable/disable the drive by using the **Enable**/**Disable** buttons.

4.6 Gearing (Electrical Axis)

The operative mode **Gearing** allows you to connect together two drives: the first drive will be set as **Master**, the second as **Slave**. The Slave will be controlled by the **emulation encoder outputs** from the Master drive.

The procedure is the following:

1- Perform the *basic installation procedure* and the motor tests previously illustrated.

2- Execute hardware connections between the Master and the Slave drive as illustrated on chapter 2.14.

3- Set the Master and the Slave drives by using the *Speeder One* interface:

Setting Master drive

a- Select one of the possible operating modes (You may select any of the available operating modes, with the exception of "5: Gearing").

b- Select the number of pulses in the "**Encoder Out**" window, which must be sent to the Slave drive.

Setting Slave drive

a- Select the "**5:Gearing**" operating mode.

b- Select the ratio between the pulses from the Master drive and the desired pulses/rev on the Slave drive, setting the "**Gear Ratio**" parameters in the "**Position**" window:

Gear Ratio
Insert into the numerator and denominator, the ratio that allows you to obtain the desired Slave speed in regards to the Master.
Example: Setting the **Encoder out** of the MASTER to **2500** pulses/rev, while the SLAVE, setted the **Gear Ratio** in **Position** to **1/5000**, the SLAVE motor will rotate at half that of the MASTER's speed, to reverse the rotation of the SLAVE respect to MASTER, set up in **Speed window** the function **Rotary Direction** on **negative**.

4- In **Position** window set:
- ✓ **FeedForward**: set to 100;
- ✓ **Kp Dynamic** e **Kp Static**;
- ✓ **Max Position Error**: set to 4096.

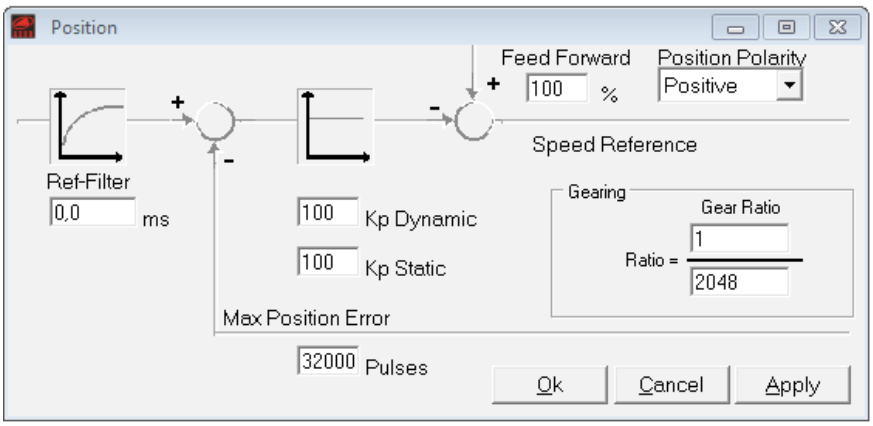

5- Save all settings by clicking on icon "**Save data to Eeprom**".

4.6 Gearing (Electrical Axis)

6- For enabling the Electrical Axis follow this procedure:

a- Enable the Master giving +24V to the **DGT-IN1** (**ENABLE**) input. The motor will start move following the operating mode set for the Master.

b- Enable the Slave giving +24V to the ENABLE input. The motor will remain blocked in torque with the position loop inserted and waiting to move. See (1)

c- When the pulses's arrive at the inputs the motor will move. See (2)

Gearing sequence:

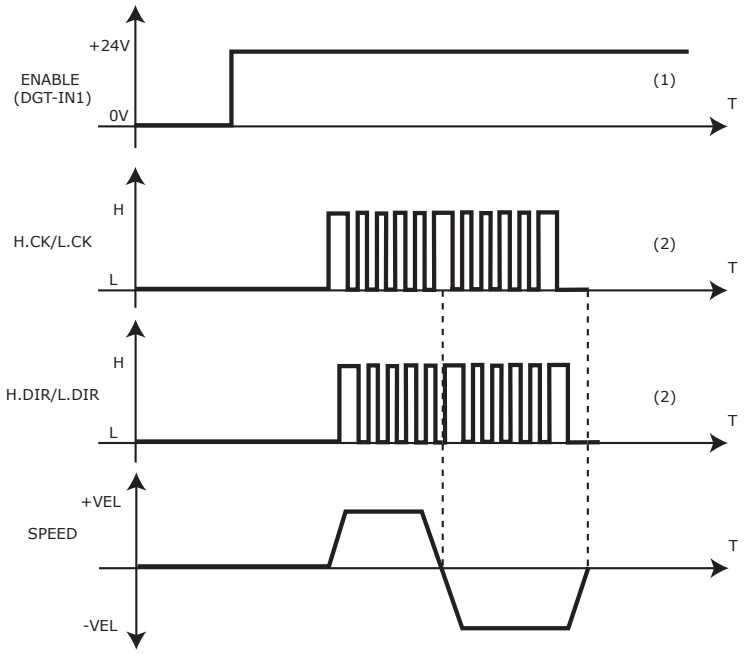

Note: If required by the application, at anytime it is possible to execute a ***homing procedure***.

You can find more information about homing in chapter 4.13.

4.6 Gearing (Electrical Axis)

It is possible to control the Slave by using the **increasing channels of an external encoder** or **the emulated encoder signals from a CN**, in this case:

1- Use the **H.CK/L.CK/0.CK** and **H.DIR/L.DIR/0.DIR** pins to connect encoder signals (+/-CHA and +/-CHB).

2- Set the operative mode "**5:Gearing**" in the OP. MODE menu.

3- Insert into the numerator and denominator of the **Gear Ratio**, the ratio that allows you to obtain the desired Slave speed in regards to the encoder.

4- Enable the drive giving +24V to the **DGT-IN1** (**ENABLE**) input. The motor will remain blocked in torque with the position loop inserted and waiting to move.

5- When the pulses's arrive at the inputs the motor will move.

ATTENTION: If the rotation is irregular or noisy, it should be necessary to *adjust the gains of the speed loop* or of *the position loop* by using an adequate procedure.

Timing on inputs:

The following table show the timing to respect on the input **H.CK**, **L.CK**, **H.DIR**, **L.DIR**.

Signal	Positive command	Negative command
CK	Phase A 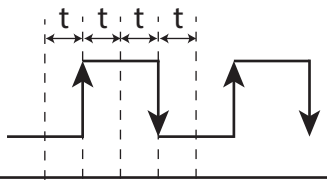	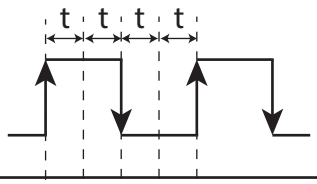
DIR	Phase B 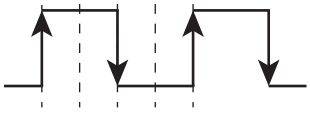 Phase B advanced by 90 deg from phase A	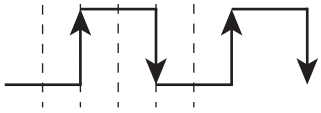 Phase B delayed by 90 deg from phase A

CK / DIR signal	Max. allowable input frequency	Minimum required time width [µs]
		t
Line driver	500 KHz	2
Open collector	200 KHz	5

4.7 Clock/Dir Command

The **clock/Dir Mode** allows you to connect the drive to a **stepper-motor controller**.

The procedure is the following:

1- Perform the *basic installation procedure* and the *motor tests* previously illustrated.

2- Execute hardware connections between drive and CN as illustrated in the chapter 2.

3- Set the drive by using the *Speeder One* interface:
- set the operative mode "**6:Pulse/Dir Mode**" in the OP. MODE window;
- open the "**Position**" window and set **Pulses per Turn** and **Gear Ratio** parameters:

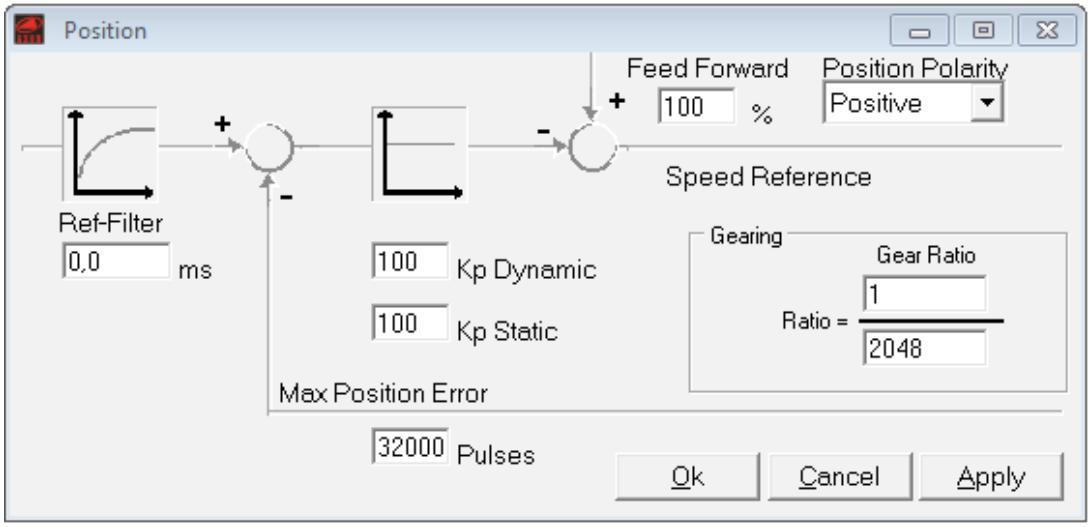

Gear Ratio
Transmission ratio between revolutions(numerator) and pulses(denominator).

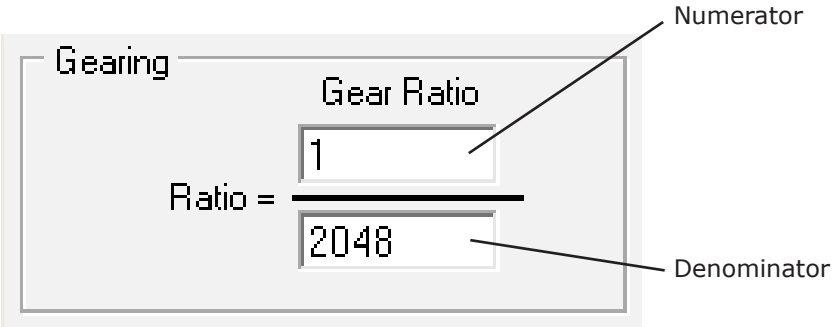

Example: For 2500 pulses/revolution set as in figure(1/2500).

4- Save all settings by clicking on icon "**Save data to Eeprom**".

4.7 Clock/Dir Command

5- For enabling the Pulse/Dir Mode follow this procedure:

a- Enable the drive giving +24V to the ENABLE input (DGT-IN1). The motor will remain locked in torque with the position loop inserted and waiting to move. See (1)

b- When the pulses arrive at the input the motor will move. See (2)

The **H.DIR/L.DIR** logic signal determines the motor's direction: with the signal **H.DIR/L.DIR = L** the motor turns clockwise (**CW**); with the signal **H.DIR/L.DIR = H**, the motor turns counter-clockwise (**CCW**).

Pulse/Dir sequence:

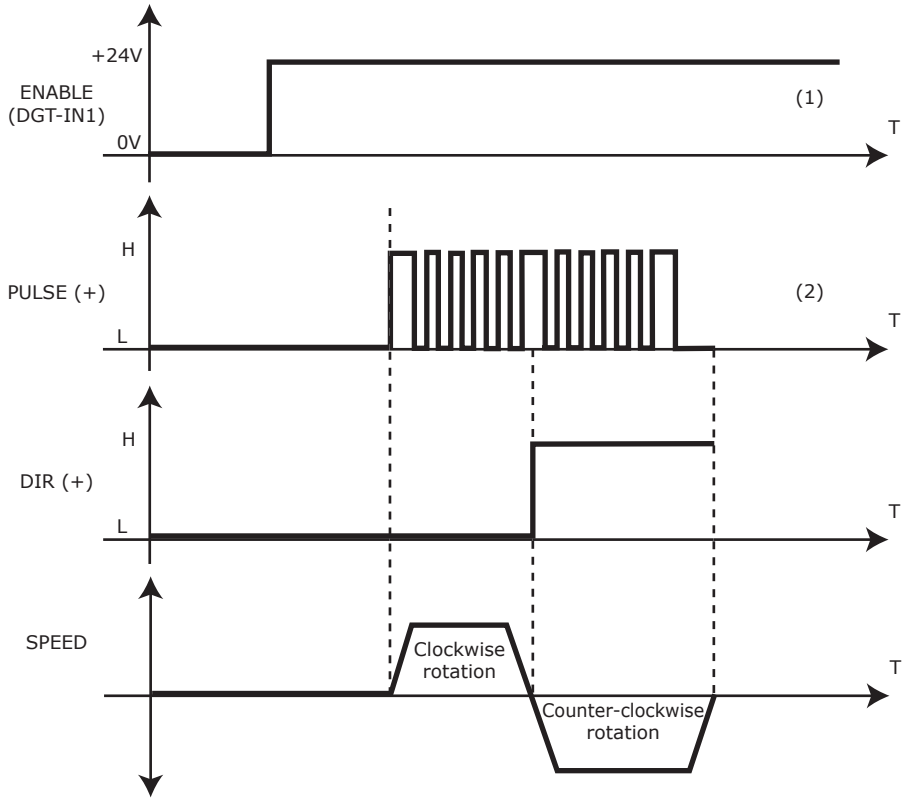

Note: If required by the application, at anytime it is possible to execute a ***homing procedure***.

You can find more information about homing in chapter 4.13.

ATTENTION: If the rotation is irregular or noisy, it should be necessary to *adjust the gains of the speed loop* or of *the position loop* by using an adeguate procedure.

4.7 Clock/Dir Command

Timing on inputs:

The following table show the timing to respect on the input **H.CK**, **L.CK**, **H.DIR**, **L.DIR**.

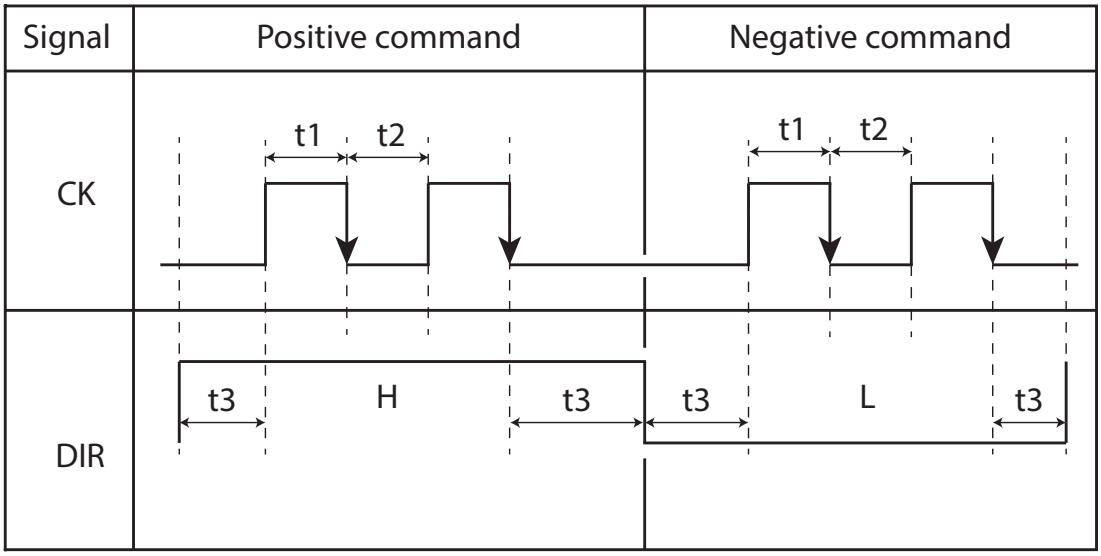

CK / DIR signal	Max. allowable input frequency	Minimum required time width [μs]		
		t1	t2	t3
Line driver	500 KHz	1	1	1
Open collector	200 KHz	2.5	2.5	2.5

4.8 CW/CCW Command

The motor is piloted with a pulse signal applied on the input **H.DIR/L.DIR/0.DIR** or **H.CK/L.CK/0.CK** to get rispectively the rotation of motor in clockwise direction or counter-clockwise.

The procedure is the following:

1- Perform the *basic installation procedure* and the *motor tests* previously illustrated.

2- Execute hardware connections between drive and CN as illustrated in the chapter 2.

3- Set the drive by using the *Speeder One* interface:
- set the operative mode "**6:Pulse/Dir Mode**" in the OP. MODE window;
- open the "**Position**" window and set **Pulses per Turn** and **Gear Ratio** parameters:

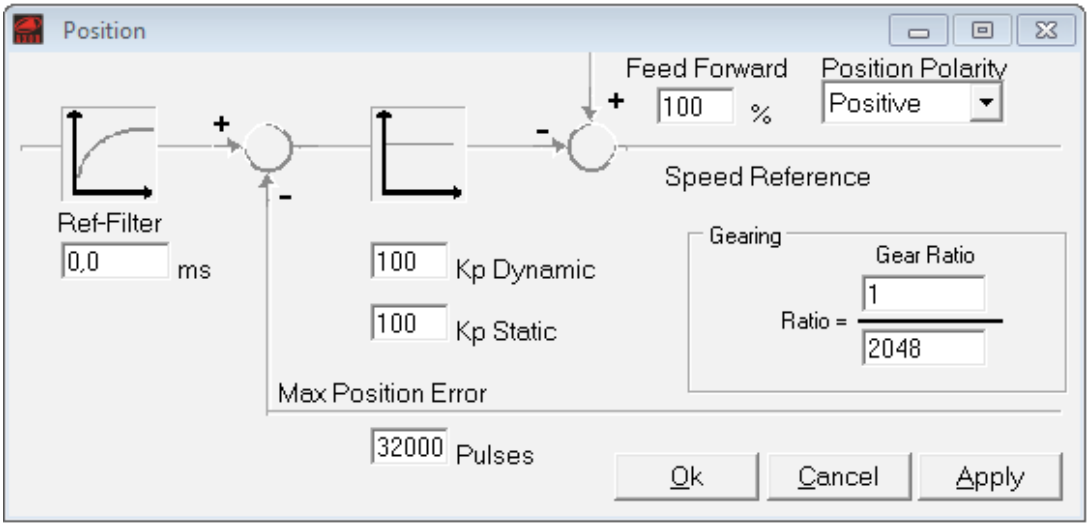

Gear Ratio
Transmission ratio between revolutions(numerator) and pulses(denominator).

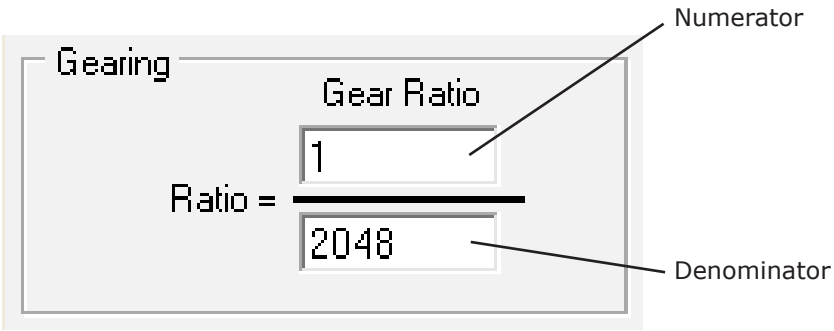

Example: For 2500 pulses/revolution set as in figure(1/2500).

4- Save all settings by clicking on icon "**Save data to Eeprom**".

4.8 CW/CCW Command

5- For enabling the Pulse/Dir Mode follow this procedure:

a- Enable the drive giving +24V to the ENABLE input (DGT-IN1). The motor will remain locked in torque with the position loop inserted and waiting to move. See (1)

b- When the pulses arrive at the input the motor will move. See (2)

With the signal on the input **H.DIR/L.DIR/0.DIR** the motor turns clockwise (**CW**); with the signal on **H.CK/L.CK/0.CK**, the motor turns counter-clockwise (**CCW**).

CW/CCW sequence:

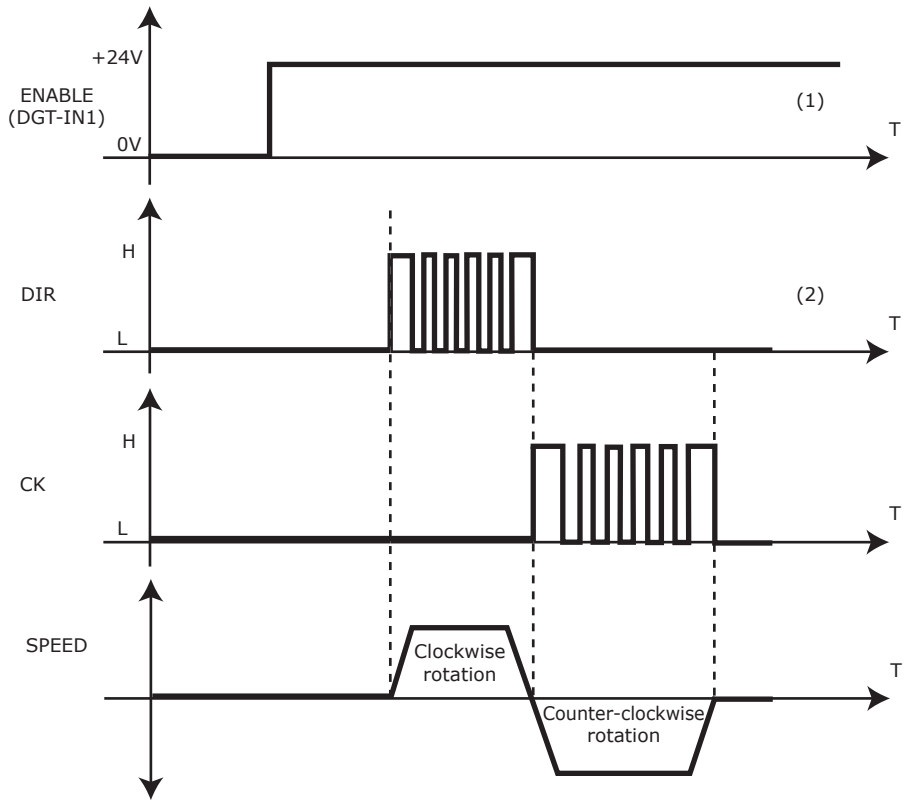

ATTENTION: If the rotation is irregular or noisy, it should be necessary to *adjust the gains of the speed loop* or of *the position loop* by using an adeguate procedure.

4.8 CW/CCW Command

Timing on inputs:

The following table show the timing to respect on the input **H.CK**, **L.CK**, **H.DIR**, **L.DIR**.

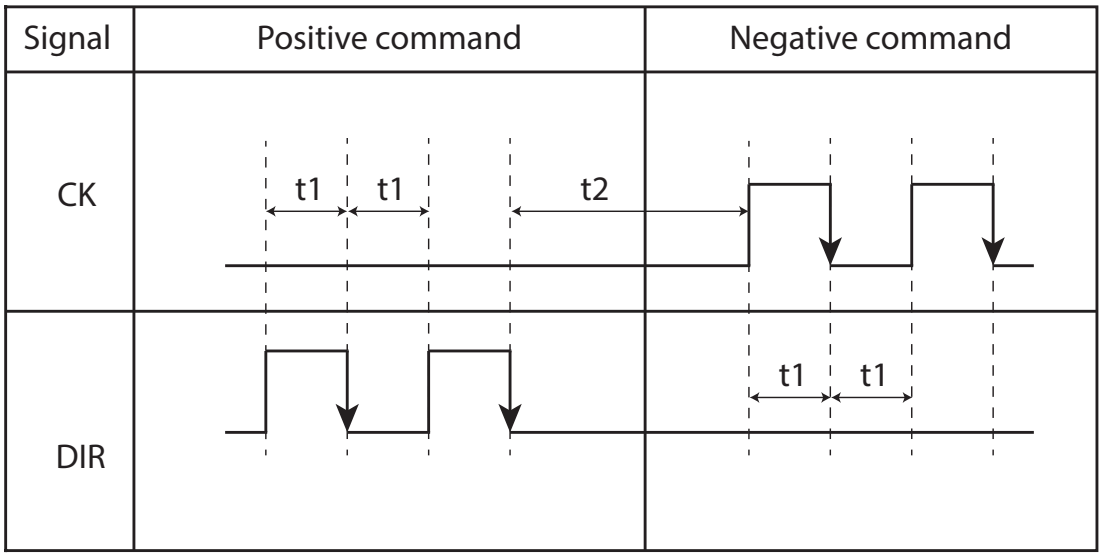

CK / DIR signal	Max. allowable input frequency	Minimum required time width [μs]	
		t1	t2
Line driver	500 KHz	1	1
Open collector	200 KHz	2.5	2.5

4.9 CanBus - Settings

The Mack® system can be controlled in **CanBus**.

The procedure is the following:

1- For each drive perform the *basic installation procedure* and the *motor tests previously* illustrated;

2- In the "**General Settings**" window of each drive set the **baud rate** parameter to define the communication speed and so the performance of the system.
All drives connected to the network must have the same baud rate.

3-For each drive set the operative mode "**7: Can Open**".

4-For each drive set a different Id.

5- Connect the first drive to the CAN MASTER by using a CanBus cable.

6- Connect each drive to the preceding and the following by using a CanBus cable.

7- Connect a **RESISTOR** (120 ohm, 1/4W) between pins **CAN H** and **CAN L** of the last drive of the network.

Note:
The interface is isolated by opto-isolators and a dc-dc power converter is present, which powers all of the circuitry of this interface. It is therefore not necessary to connect any external power supply to the drive.

4.10 Can Bus - Command Sequences

The integrated software is based upon the **CAN open DS301-V4.02** communication protocol and on profile **DSP402-V2.0**.

Objects used in all operative modes

The following objects can be used independently to the selected operative mode (*Position Mode, Velocity Mode, Homing Mode* or *Interpolated Mode*) and they allow to check and command the axis:

Index	Name	Access	Description
6040.0_H	Controlword	R/W	It enables the axis and, in some modes, it gives the start motion command.
6041.0_H	Statusword	RO	It reads the axis status.
6060.0_H	Mode of operation	R/W	It sets one of the CanOPEN (DSP402) operative modes: • *profile velocity mode*: 3 • *profile position mode*: 1 • *homing mode*: 6 • *interpolated mode*: 7
6061.0_H	Mode of op. display	RO	It reads the active operative mode.
6064.0_H	Position actual value	RO	It provides the actual axis position, in Um.
$606C.0_H$	Velocity actual value	RO	It provides the actual axis velocity, in Um/s.
6092.1_H	Feed	R/W	It converts the Can unit of measurement into increments by using the following formula: $Position_{Um}=Position_{inc}*Feed/(65536*Motor\ shaft)$
6092.2_H	Motor shaft	R/W	

Object 6040$_H$: Controlword

This object has 16 bits, each of these has a particular meaning; some bits have a different function in accordance to the selected operative mode.

In the following table there are the bits desciptions for all drive operative modes.

***Profile Position Mode* (OP number: 1)**							
BIT 15 MANUFACT SPECIFIC	**BIT 14** MANUFACT SPECIFIC	**BIT 13** MANUFACT SPECIFIC	**BIT 12** MANUFACT SPECIFIC	**BIT 11** MANUFACT SPECIFIC	**BIT 10** RESERVED	**BIT 9** RESERVED	**BIT 8** HALT
BIT 7 FAULT RESET	**BIT 6** ABSOLUTE RELATIVE	**BIT 5** CHANGE SET IMMEDIATELY	**BIT 4** NEW SET POINT	**BIT 3** ENABLE OPERATION	**BIT 2** QUICK STOP	**BIT 1** ENABLE VOL-TAGE	**BIT 0** SWITCH ON

***Profile Velocity Mode* (OP number: 3)**							
BIT 15 MANUFACT SPECIFIC	**BIT 14** MANUFACT SPECIFIC	**BIT 13** MANUFACT SPECIFIC	**BIT 12** MANUFACT SPECIFIC	**BIT 11** MANUFACT SPECIFIC	**BIT 10** RESERVED	**BIT 9** RESERVED	**BIT 8** HALT
BIT 7 FAULT RESET	**BIT 6** RESERVED	**BIT 5** RESERVED	**BIT 4** RESERVED	**BIT 3** ENABLE OPERATION	**BIT 2** QUICK STOP	**BIT 1** ENABLE VOL-TAGE	**BIT 0** SWITCH ON

***Homing Mode* (OP number: 6)**							
BIT 15 MANUFACT SPECIFIC	**BIT 14** MANUFACT SPECIFIC	**BIT 13** MANUFACT SPECIFIC	**BIT 12** MANUFACT SPECIFIC	**BIT 11** MANUFACT SPECIFIC	**BIT 10** RESERVED	**BIT 9** RESERVED	**BIT 8** HALT
BIT 7 FAULT RESET	**BIT 6** RESERVED	**BIT 5** RESERVED	**BIT 4** START OPERATION	**BIT 3** ENABLE OPERATION	**BIT 2** QUICK STOP	**BIT 1** ENABLE VOL-TAGE	**BIT 0** SWITCH ON

***Interpolated Mode* (OP number: 7)**							
BIT 15 MANUFACT SPECIFIC	**BIT 14** MANUFACT SPECIFIC	**BIT 13** MANUFACT SPECIFIC	**BIT 12** MANUFACT SPECIFIC	**BIT 11** MANUFACT SPECIFIC	**BIT 10** RESERVED	**BIT 9** RESERVED	**BIT 8** HALT
BIT 7 FAULT RESET	**BIT 6** RESERVED	**BIT 5** RESERVED	**BIT 4** ENABLE IP MODE	**BIT 3** ENABLE OPERATION	**BIT 2** QUICK STOP	**BIT 1** ENABLE VOL-TAGE	**BIT 0** SWITCH ON

Object 6041$_H$: Statusword

This object has 16 bits, each of these has a particular meaning; some bits have a different function in accordance to the selected operative mode.

In the following table there are the bits descriptions for all drive operative modes.

***Profile Position Mode* (OP number: 1)**							
BIT 15 MANUFACT SPECIFIC	**BIT 14** MANUFACT SPECIFIC	**BIT 13** FOLLOWING ERROR	**BIT 12** SET PINT ACK	**BIT 11** INTERNAL LIM ACTIVE	**BIT 10** TARGET REACHED	**BIT 9** REMOTE	**BIT 8** MANUFACT SPECIFIC
BIT 7 WARNING	**BIT 6** SWITCH ON DISABLED	**BIT 5** QUICK STOP	**BIT 4** VOLTAGE ENABLED	**BIT 3** FAULT	**BIT 2** OPERATION ENABLED	**BIT 1** SWITCH ON	**BIT 0** READY TO SWITCH ON

***Profile Velocity Mode* (OP number: 3)**							
BIT 15 MANUFACT SPECIFIC	**BIT 14** MANUFACT SPECIFIC	**BIT 13** MAX SLIP ERROR	**BIT 12** SPEED	**BIT 11** INTERNAL LIM ACTIVE	**BIT 10** TARGET REACHED	**BIT 9** REMOTE	**BIT 8** MANUFACT SPECIFIC
BIT 7 WARNING	**BIT 6** SWITCH ON DISABLED	**BIT 5** QUICK STOP	**BIT 4** VOLTAGE ENABLED	**BIT 3** FAULT	**BIT 2** OPERATION ENABLED	**BIT 1** SWITCH ON	**BIT 0** READY TO SWITCH ON

***Homing Mode* (OP number: 6)**							
BIT 15 MANUFACT SPECIFIC	**BIT 14** MANUFACT SPECIFIC	**BIT 13** HOMING ERROR	**BIT 12** HOMING ATTAINED	**BIT 11** INTERNAL LIM ACTIVE	**BIT 10** TARGET REACHED	**BIT 9** REMOTE	**BIT 8** MANUFACT SPECIFIC
BIT 7 WARNING	**BIT 6** SWITCH ON DISABLED	**BIT 5** QUICK STOP	**BIT 4** VOLTAGE ENABLED	**BIT 3** FAULT	**BIT 2** OPERATION ENABLED	**BIT 1** SWITCH ON	**BIT 0** READY TO SWITCH ON

***Interpolated Mode* (OP number: 7)**							
BIT 15 MANUFACT SPECIFIC	**BIT 14** MANUFACT SPECIFIC	**BIT 13** RESERVED	**BIT 12** IP MODE ACTIVE	**BIT 11** INTERNAL LIM ACTIVE	**BIT 10** TARGET REACHED	**BIT 9** REMOTE	**BIT 8** MANUFACT SPECIFIC
BIT 7 WARNING	**BIT 6** SWITCH ON DISABLED	**BIT 5** QUICK STOP	**BIT 4** VOLTAGE ENABLED	**BIT 3** FAULT	**BIT 2** OPERATION ENABLED	**BIT 1** SWITCH ON	**BIT 0** READY TO SWITCH ON

Profile Velocity (mode of operation=3)

In this operative mode the axis is control by using a *speed reference*, that can be changed at any moment. SDO and PDO messages can be used indifferently.

In the following table there are the specific objects which can be used in this operative mode:

Usable objects:

Index	Name	Access	Description
$607E.0_H$	Polarity	R/W	It inverts the movement direction setting to 1 the bit 6 of the object.
$60FF0_H$	Target velocity	R/W	It sets a value for the *speed* reference.
6083.0_H	Profile acceleration(*)	R/W	It sets the *acceleration* used to reach the set speed reference, in Um/s^2.
6084.0_H	Profile deceleration(*)	R/W	It sets the *deceleration* used by the axis during normal functioning, Um/s^2.
6085.0_H	Quick stop deceleration(*)	R/W	It sets the *deceleration* used by the axis in case of malfunctions, Um/s^2.

(*) The acceleration values are then converted in ms to calculate the time for the ramp, by using the following formula:

$$t_{ms} = V_{um/s} / a_{Um/s^2} * 1000 * 2^{15} / V_{norm}$$

where:
A value of $V_{norm} = 2^{15}$ means max speed for the motor.

Command sequence

In the following table there is the axis enable and movement sequence in the *profile velocity mode*.

CW means *controlword* and **SW** means *statusword* and we suppose that the Can node is into the operational state (NMT state= 5).

Command	Issue
---	Start state, machine start up: node into *operational* mode, axis without torque: $CW=0000_H$ and $SW=0250_H$.
$obj(6060_H) = 3$	I set the *Profile velocity* Can operative mode.
$CW=0006_H$	First step of the enable sequence: $SW=0231_H$.
$CW=0007_H$	Second step of the enable sequence: $SW=0233_H$.
$CW=000F_H$	Third step of the enable sequence: $SW=0237_H$. At this point the motor is steady with torque.
$obj(6083_H) = acc$	I set the acceleration value.
$obj(6084_H) = dec$	I set the deceleration value.
$obj(60FF_H) = value$	The axis moves with an acceleration equal to *acc* and reach the *value* speed.
$obj(60FF_H) = 0$	The axis stops with a deceleration equal to *dec* and it remains steady with torque.

Profile Position (mode of operation=1)

In this mode the axis has to reach an absolute position; the speed profile, the acceleration and the deceleration have to be set. The axis movement starts after the start command expedition; at this point the axis makes the positioning and when the positioning is finished it informs the control that the set position is reached or it dispatches a following error if the positioning has not been completed. During the positioning the control cannot modify the parameters of the previously set profile; it can only stop the movement by using the *Halt* command.

Usable objects:

Index	Name	Access	Description
6067.0_H	Position window	R/W	It sets the *space range* for the set quote, in Um.
6068.0_H	Pos. window time	R/W	It sets the *time*, in ms, after which the attainment of the quote is indicated .
$607A.0_H$	Target position	R/W	It sets the *absolute position* that has to be reached.
$607D.1_H$	Min position limit	R/W	It sets the *min value* that the set quote can reach.
$607D.2_H$	Max position limit	R/W	It sets the *max value* that the set quote can reach.
$607E.0_H$	Polarity	R/W	It inverts the movement direction by setting to 1 the bit 7 of the object.
$607F.0_H$	Max profile velocity	R/W	It sets the max value for the profile speed.
6081.0_H	Profile velocity	R/W	It sets the profile *speed* used to reach the set quote.
6083.0_H	Profile acceleration(*)	R/W	It sets the *acceleration* used to reach the set reference speed.
6084.0_H	Profile deceleration(*)	R/W	It sets the *deceleration* used by the axis to stop in normal conditions.
6085.0_H	Quick stop deceleration(*)	R/W	It sets the *deceleration* used by the axis during malfunctions.

(*) The acceleration values are converted in ms in order to calculate the ramp time by using the following formula:

$$t_{ms} = V_{um/s} / a_{Um/s^2} * 1000 * 2^{15} / V_{norm}$$

where:
V_{norm} is a parameter value of the speed reference regarding the maximum speed.

Command sequence

In the following table there is the axis enable and movement sequence in the *profile position mode*.

CW means *controlword* and **SW** means *statusword* and we suppose that the Can node is into the operational state (NMT state= 5).

Command	Issue
---	Start state, machine start up: node into *operational mode*, exit without torque: CW=0000_H and SW=0250_H.
obj(6060_H) = 1	I set the *Profile position* Can operative mode.
CW=0006_H	First step of the enable sequence: SW=0231_H.
CW=0007_H	Second step of the enable sequence: SW=0233_H.
CW=$000F_H$	Third step of the enable sequence: SW=0237_H. At this point the motor is steady with torque.
obj($607A_H$) = *pos_rif*	I set the *absolute quote* that has to be reached.
obj(6083_H) = *acc*	I set the *acceleration* value.
obj(6084_H) = *dec*	I set the *deceleration* value.
obj(6081_H) = *vel_profile*	I set the profile *velocity*.
CW=$001F_H$	Start command: the axis starts to move toward the set quote.
---	SW = 1237_H ...positioning...
---	SW = 0637_H ...positioning ended: the quote is reached.

Homing mode (mode of operation = 6)

This mode allows for zeroing the axis; the homing mode is one of the following:

Mode	Description
3	Clockwise + NA sensor + zero encoder
4	Counter clockwise + NC sensor + zero encoder
5	Counter clockwise + NA sensor + zero encoder
6	Clockwise + NC sensor + zero encoder
7	Clockwise + NA sensor
8	Counter clockwise + NC sensor
9	Counter clockwise + NA sensor
10	Clockwise + NC sensor
33	Clockwise + zero encoder
34	Counter clockwise + zero encoder
35	Immediate homing

Usable objects:

Index	Name	Access	Description
$607C.0_H$	Home offset(*)	R/W	It sets the *preset quote* desired after homing.
6098.0_H	Home method	R/W	It sets the desired *homing mode*. See the previous table.
6099.1_H	Speed during search for switch	R/W	It sets the *speed* used during the homing for switch search.
6099.2_H	Speed during search for zero	R/W	It sets the *speed* used during the homing for zero search.
$609A.0_H$	Profile deceleration(**)	R/W	It sets the *acceleration* and *deceleration* used to reach the set homing speed.

(*) This value does not modify the homing procedure, it just sets the start up quote (preset) visualized after homing; the real position does not change.
(**) The acceleration values are converted in ms in order to calculate the ramp time by using the following formula:

$$t_{ms} = V_{um/s} / a_{Um/s^2} * 1000 * 2^{15} / V_{norm}$$

where:
V_{norm} is a parameter value of the speed reference regarding the maximum speed.

Command sequence

In the following table there is the axis enable and movement sequence in the *homing mode*.

CW means *controlword* and **SW** means *statusword* and we suppose that the Can node is into the operational state (NMT state= 5).

Command	Issue
---	Start state, machine start up: node into *operational mode*, exit without torque: CW=0000_H and SW=0250_H
obj(6060_H) = 6	I set the *Homing mode* Can operative mode.
CW=0006_H	First step of the enable sequence: SW=0231_H.
CW=0007_H	Second step of the enable sequence: SW=0233_H.
CW=$000F_H$	Third step of the enable sequence: SW=0237_H. At this point the motor is steady with torque.
obj($609A_H$) = *acc*	I set the *acceleration* value.
obj(6099.1_H) = *vel1*	It sets the *speed* used during the homing for switch search.
obj(6099.2_H) = *vel2*	It sets the *speed* used during the homing for zero search.
obj(6098_H) = *home*	I set the *homing mode* (see the previous table)
CW=$001F_H$	Start up command: the axis starts moving for zero search.
---	SW = 0237H ...homing...
---	SW = 1237H ...homing ended correctly SW = 2237H ...error during homing procedure

Interpolated mode (mode of operation = 7)

In this mode, the master sends to the drive, at a predetermined interval of time, a quota delta that the axis must reach. The drive divides this interval into four subintervals and calculates the share of feed to meet the reference setted form the can master (delta quota). To start the movement, the master has to send a start command via the controlword.

Usable objects:

Indice	Nome	Accesso	Descrizione
$60C0.0_H$	Interpolation submode select	R/W	Set the type of interpolation: the only value accepted is 0, linear interpolation.
$60C1.1_H$	Interpolation Data	R/W	Quota sent form the can master
$60C2.1_H$	Ip Time Unit	R/W	Set the value n of the period using the following formula $n*10^{Ip\_Time\_Index}$ second.
$60C2.2_H$	Ip Time Index	R/W	The only accepted value is -3, milliseconds.
$60C3.1_H$	Syncronize on Group	R/W	The only accepted value is 0, generic sync.
$60C3.2_H$	Ip_Sync every n Event	R/W	Set the number of sync that must arrive before receving the quota.

Command sequence

In the following table is showed the sequence of enable and movement of the axis in iterpolation mode. For convenience is indicated with CW the controlword e SW the statusword and is assumed that the node Can is in the the operational state (state NMT = 5).

Comando	Esito
---	Inital state, machine powerup: nodoe in operational mode, axis is not in torque: $CW=0000_H$ e $SW=0250_H$.
$obj(6060_H) = 7$	Set the operative mode of Can in *Interpolated Mode*.
$obj(60C2.1_H) = p$	Set the period of interpolazione.
$CW=0006_H$	First step of the enable sequence: $SW=0231_H$.
$CW=0007_H$	Second step of the enable sequence: $SW=0233_H$.
$CW=000F_H$	Third step of the enable sequence: $SW=0237_H$. Now the motor in stoppend in troque.
$CW=001F_H$	Start command: the axis start to move.
$obj(60C1.1_H) = Q_i$	The can master sent the quote of position every interval of p time.

NOTE: FOR MORE DETAIL ABOUT CANOPEN PROTOCOL IMPLEMENTED BY AXOR SEE "CANOPEN/ETHERCAT REFERENCE MANUAL" PROVIDED BY AXOR ON REQUEST.

4.11 EtherCAT - Settings

Il sistema **Mack®** può essere configurato e controllato in **EthetCAT.**

EtherCAT - Setting of operative mode

Set the "**OP.MODE**" with "**9:ETHERCAT**" mode with the SpeederOne interface.

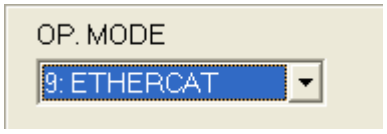

EtherCAT - Setting node ID

EtherCAT protocol supports up to 65536 nodes in a communication network.
Each Axor drive has its own ID, which may only exist once in the system. It can be set via Axor SpeederOne interface --> "General Settings" window:

The value 0 or values > 32767 are not allowed and cannot be set.
After changing of the node ID, save on eeprom, then power off and on the drive.
A value equal to 32767 means that the master EtherCAT allocates automatically the node ID.

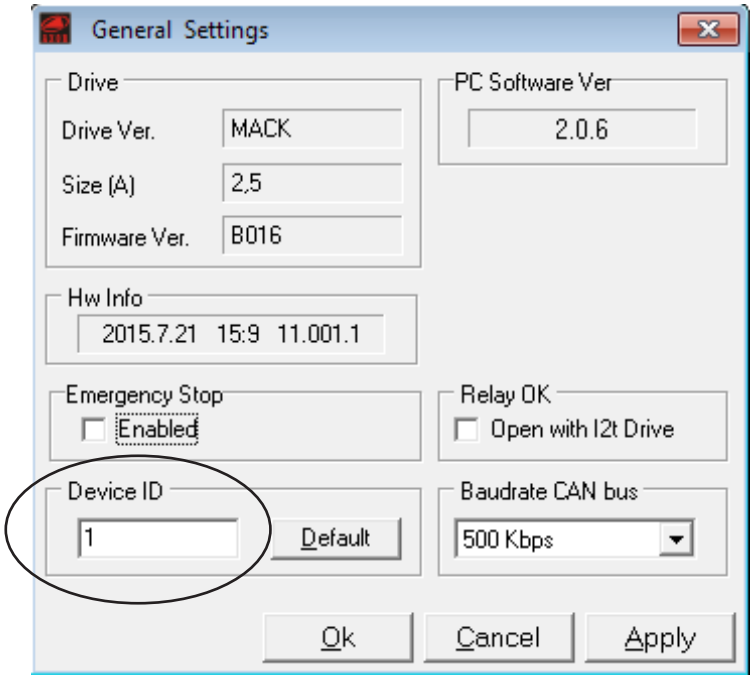

NOTE: FOR MORE DETAIL ABOUT ETHERCAT PROTOCOL IMPLEMENTED BY AXOR SEE "CANOPEN/ETHERCAT REFERENCE MANUAL" PROVIDED BY AXOR ON REQUEST.

4.12 Square Wave

Il **Mack® Indy** can pilot the motor with a square wave signal or with two digital programmable quote.

For pilot the motor with a square wave signal the procedure is the following:

1- Perform the *basic installation procedure* and the *motor tests* previously illustrated.

2- Perform the following settings in ***interfaccia Speeder One***:
a - select the operative mode **3:Square Wave Period**;
b - insert the desired speed in "Digital Speed" and press enter ↵;
c - insert the desired reversal motor period in "Square Wave" in milliseconds and press enter ↵;
d - set the value of "Software Limit HI" to 0 and press enter ↵;
e - set the value of "Software Limit LO" to 0 and press enter ↵;
f - is possible to set the ramp of acceleration and decceleration with the parametrs "Acc. Ramp" and "Dec. Ramp" in the "Speed" window;
g - save all settings by clicking on icon **Save Data to Eeprom**;
h - enable/disable the drive by using the **Enable**/**Disable** buttons.

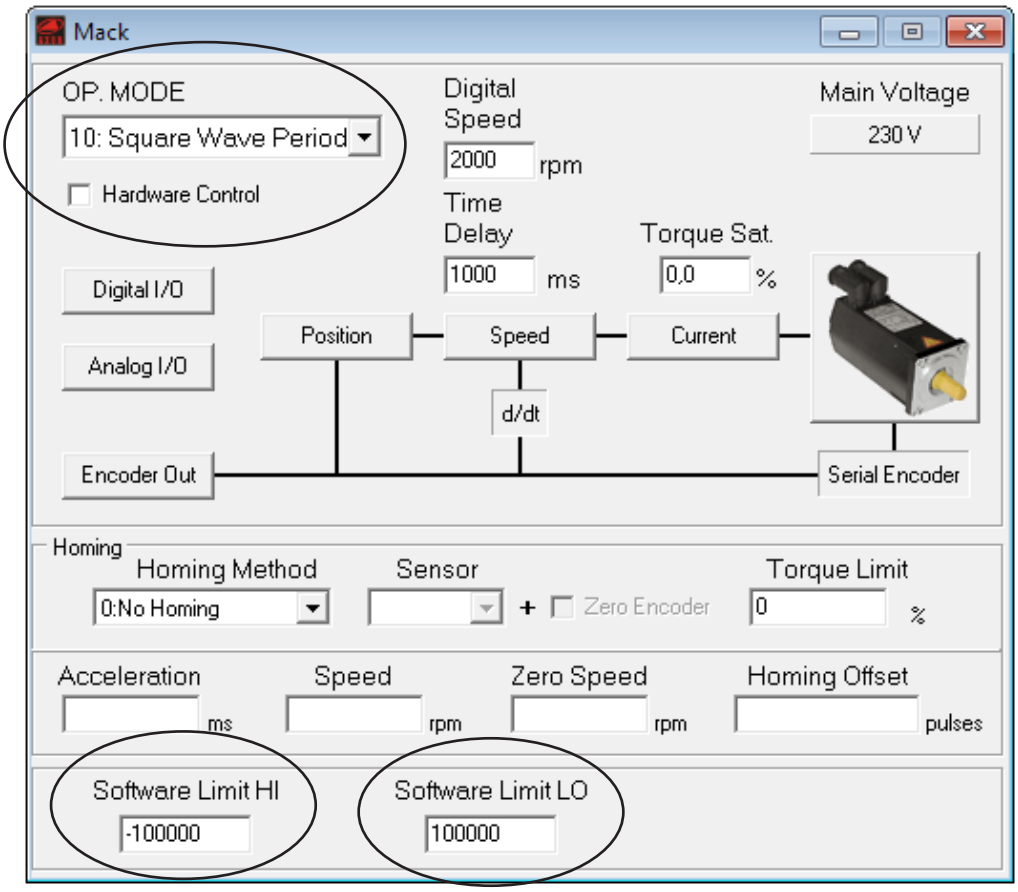

For pilot the motor with two digital programmable quote:

1- Perform the *basic installation procedure* and the *motor tests* previously illustrated.

2- Perform the following settings in ***interfaccia Speeder One***:
a - select the operative mode **3:Square Wave Period**;
b - insert the desired speed in "Digital Speed" and press enter ↵;
c - set the value "Software Limit LO" with the first quota of position in pulse and press enter ↵;
d - set the value "Software Limit HI" with the second quota of position in pulse and press enter ↵;
e - is possible to set the ramp of acceleration and decceleration with the parametrs "Acc. Ramp" and "Dec. Ramp" in the "Speed" window;
f - save all settings by clicking on icon **Save Data to Eeprom**;
g - enable/disable the drive by using the **Enable**/**Disable** buttons.

4.13 Homing - Procedures

A homing procedure uses the signal of the **homing sensor** and, eventually, the **zero signal** of the encoder.

The Mack® supports the following **HOMING PROCEDURES**:

A- **Direct homing procedure with normally opened home sensor**

Example:

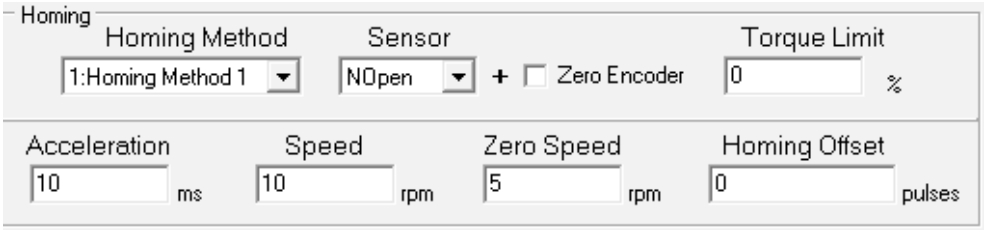

Case 1: If the homing sensor is low at the start homing the drive pilots the motor in counter-clockwise direction searching for the home sensor. When the sensor output becomes high, the motor decelerates and inverts its motion.
Case2: If the homing sensor output is already high at the homing start the motor simply turns clockwise with a speed like the "Zero speed" parameter.
The home position will be set when the falling edge of the home sensor is received.

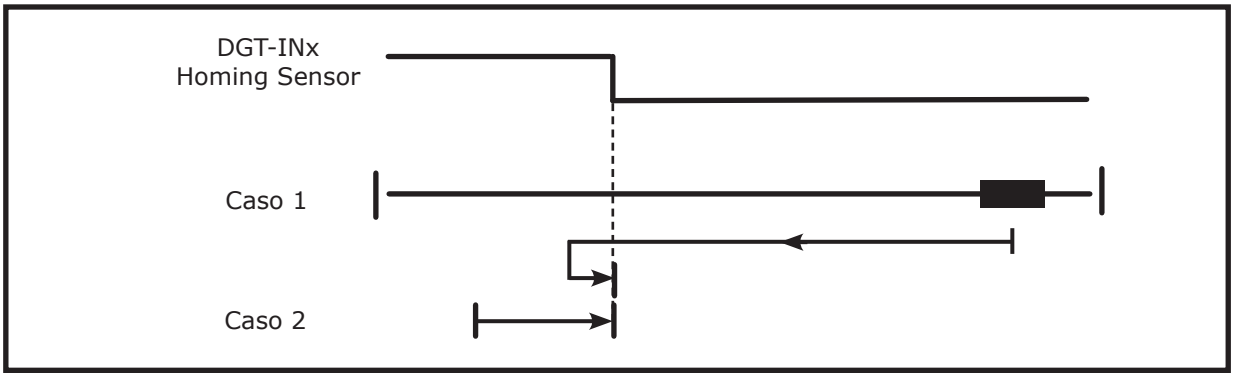

B- **Reverse homing procedure with normally opened home sensor**

Case 1: If the homing sensor is low at the start homing the drive pilots the motor in clockwise direction searching for the home sensor. When the sensor output becomes high, the motor decelerates and inverts its motion.
Case2: If the homing sensor output is already high at the homing start the motor simply turns counter- clockwise with a speed like the "Zero speed" parameter.
The home position will be set when the falling edge of home sensor is received.

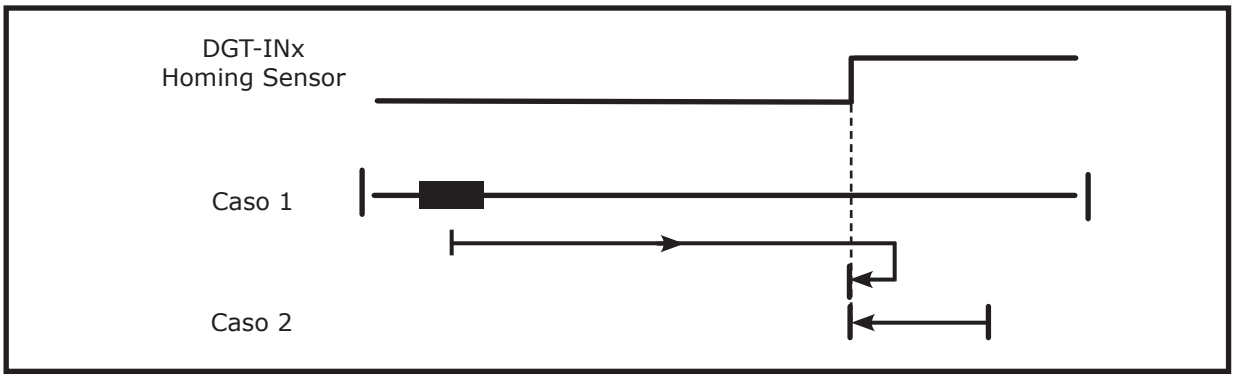

C- **Direct homing procedure with normally closed home sensor**

Example:

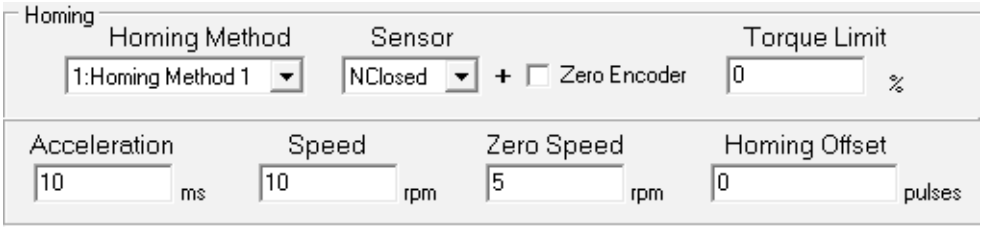

Case1: If the homing sensor is high at the start homing the drive pilots the motor in counter-clockwise direction searching for the home sensor. When the sensor output becomes low, the motor decelerates and inverts its motion.
Case2: If the homing sensor output is already low at the homing start the motor simply turns clockwise with a speed like the "Zero speed" parameter.
The home position will be set when the rising edge of home sensor is received.

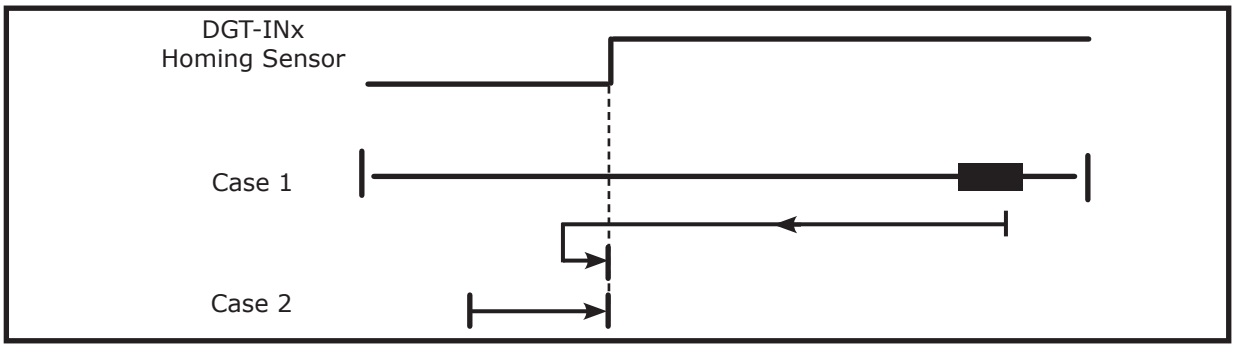

D- **Reverse homing procedure with normally closed home sensor**

Case1: If the homing sensor is high at the start homing the drive pilots the motor in clockwise direction searching for the home sensor. When the sensor output becomes low, the motor decelerates and inverts its motion.
Case2: If the homing sensor output was already low at the homing start the motor axis simply turns counter-clockwise with a speed like the "Zero speed" parameter.
The home position will be set when the rising edge of home sensor is received.

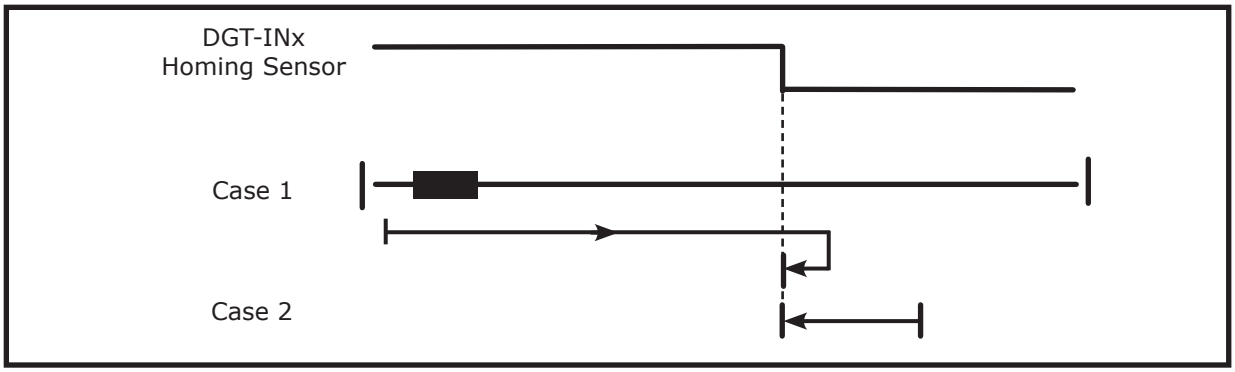

E- **Direct homing procedure with normally opened home sensor and zero index pulses**

Example:

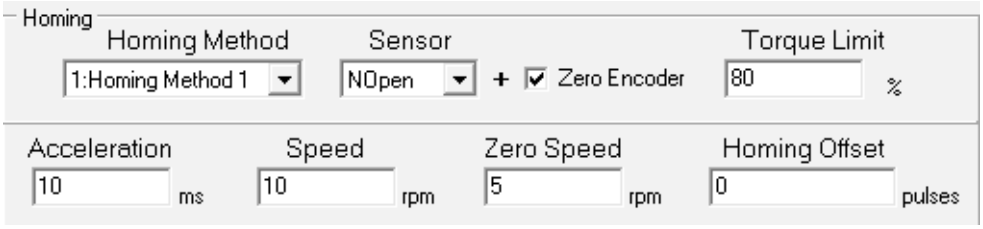

Case1: If the homing sensor is low at the start homing the drive pilots the motor axis in counter-clockwise direction searching for the home sensor. When the sensor output becomes high, the motor decelerates and inverts its motion.
Case2: If the homing sensor output is already high at the homing start the motor simply tursn clockwise with a speed like the "Zero speed" parameter.
The home position will be set on the first zero pulse after the falling edge of the home sensor.

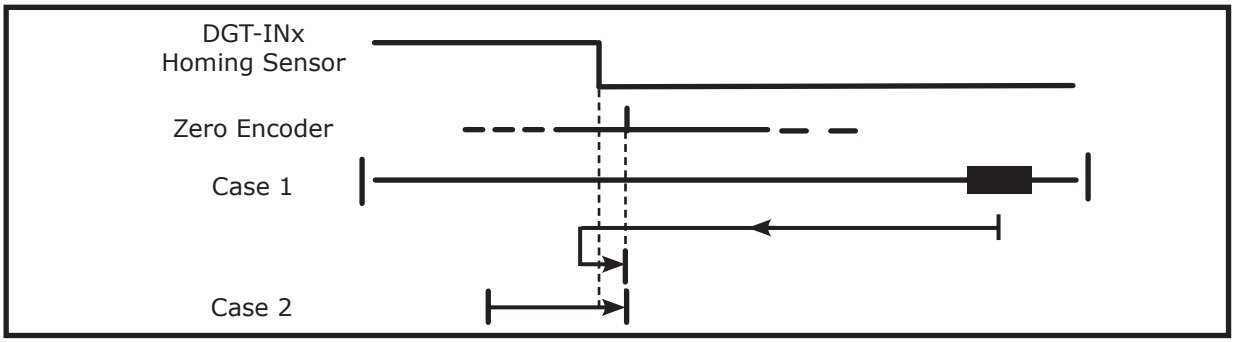

F- **Reverse homing procedure with normally opened sensor and zero index pulses**

Case1: If the homing sensor is low at the start homing the drive pilots the motor in clockwise direction searching for the home sensor. When the sensor output becomes high, the motor decelerates and inverts its motion.
Case2: If the homing sensor output is already high at the homing start the motor simply turns counter- clockwise with a speed like the "Zero speed" parameter.
The home position will be set on the first zero pulse after that the falling edge of the home sensor.

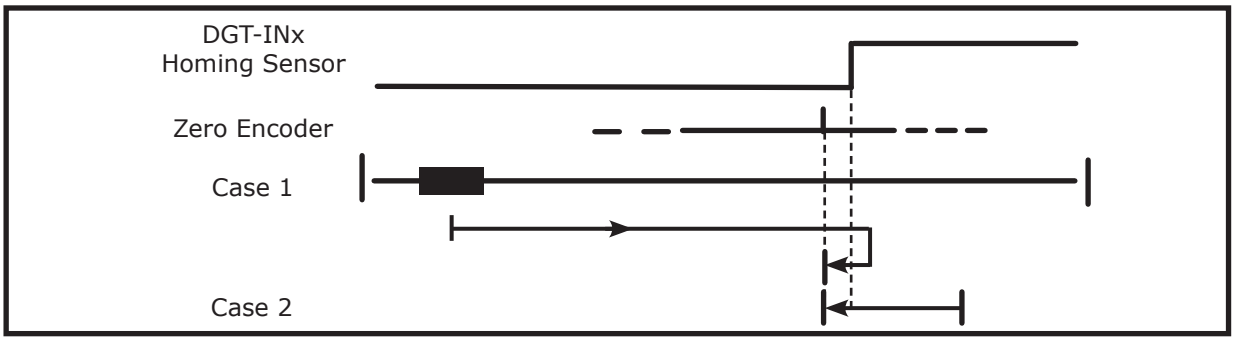

G- Direct homing procedure with normally closed home sensor and zero index pulses

Case1: If the homing sensor is high at the start homing the drive pilots the motor in counter-clockwise direction searching for the home sensor. When the sensor output becomes low, the motor decelerates and inverts its motion.
Case2: If the homing sensor output is already low at the homing start the motor simply turns clockwise with a speed like the "Zero speed" parameter.
The home position will be set on the first zero pulse after that the rising edge of home sensor is received.

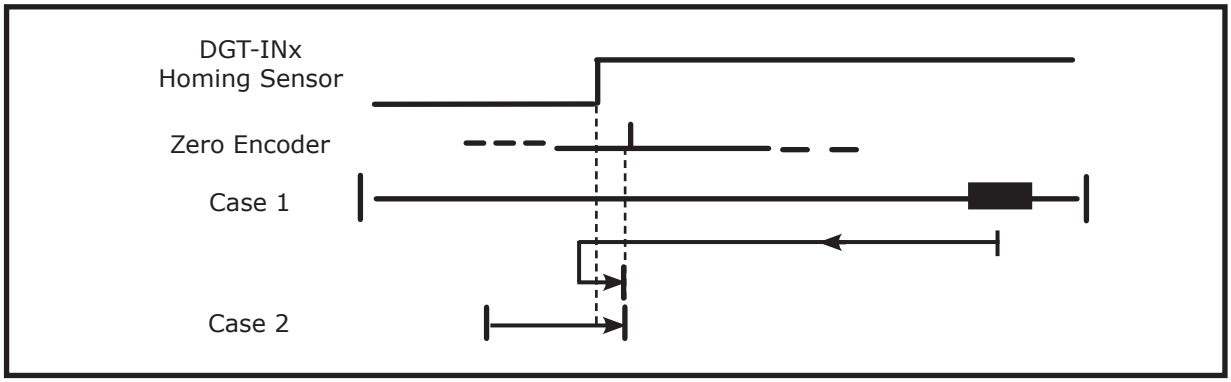

H- Reverse homing procedure with normally closed home sensor and zero index pulses

Case1: If the homing sensor is high at the start homing the drive pilots the motor in clockwise direction searching for the home sensor. When the sensor output becomes low, the motor decelerates and inverts its motion.
Case2: If the homing sensor output is already low at the homing start the motor simply turns counter-clockwise with a speed like the "Zero speed" parameter.
The home position will be set on the first zero pulse after that the rising edge of home sensor is received.

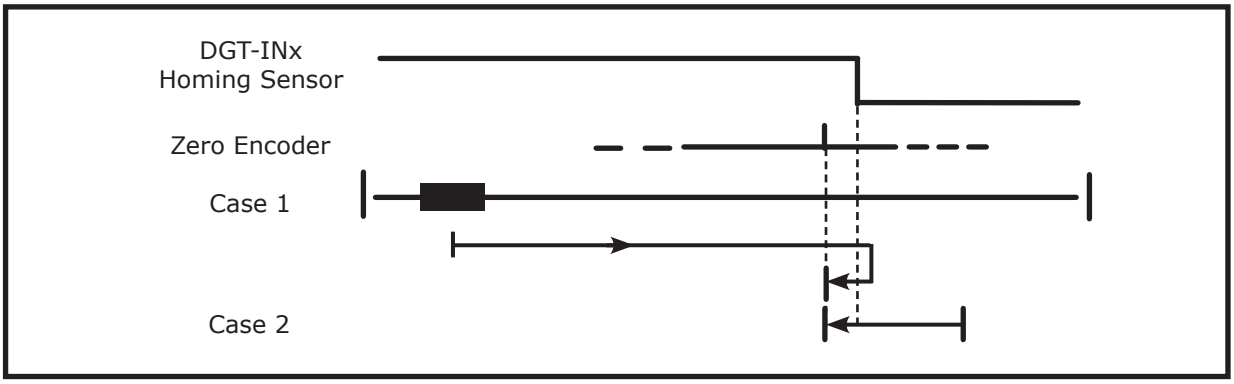

I- Homing immediate

Enabling the digital input (active high) with this homing method the motor doesn't move and the current position is set as the home position.

4.14 Homing - Settings

To execute a homing procedure you have to:

1- set the desired operative mode;
2- set correctly parameters in the "**Position**" window;
3- set correctly **homing parameters** in the main window of *Speeder One* interface;
4- set a digital input with function "**Homing Sensor**", another input with function "**Start Homing**" and an output with function "**Homing OK**";
5- connect homing sensor to digital input pin set with "**Homing Sensor**" function (refer to point 4 settings).

Let we see settings in detail:

1- Operative mode settings:

Set the desired operative mode.

2- Settings on "Position" window:

Feed Forward
This improves the system's dynamics.
Suggested value: 100%.

Kp Dynamic
This is the position loop gain.
Suggested values:
1÷999.

Kp Static
Set as Kp Dynamic.

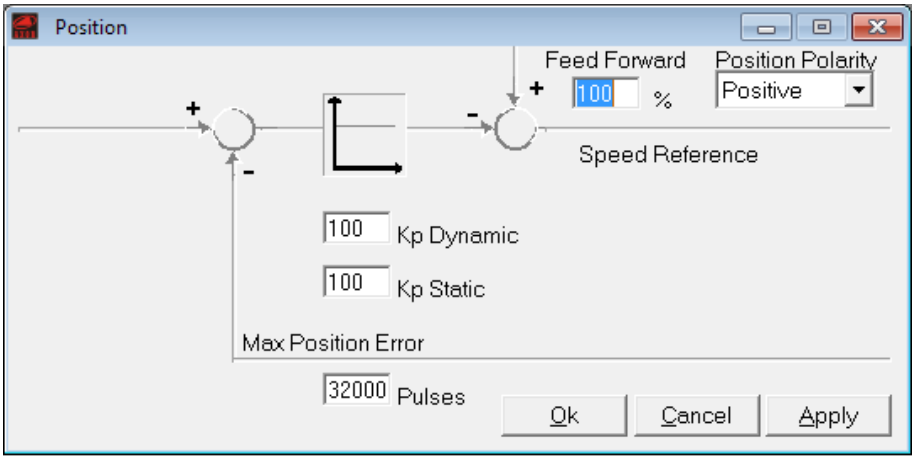

Position Polarity
Positive or Negative. This parameter enables a **complete inversion of axis control**, in fact selecting the "**Negative**" choice you have effects on homing and positioning procedures like as follow:
1) the rotation wise of supported homing procedures is inverted referred to the procedures in the chapter relative to homing procedures;
2) the "Homing Offset" value set is multiplied by -1;
3) all target positions ("Final Position") are multiplied by -1.

Max Position Error
This is the position error after which the drive goes into alarm 14 ("Following Error").
To calculate the value to insert in this field, use the following formula:

$$\text{Max\_Position\_Error} = \frac{K°}{360°} * 65536$$

where K° is the value in mechanical degrees of the maximum accepted error.
The maximum selectable position error is 180° (32767 pulses).

Example: If the maximum mechanical accepted error is 45° (1/8 mechanical turn), then the value to insert in the Max Position Error box is 8192, in fact 45°x65536/360°=8192.

We suggest to insert the value 8192.

3- Homing parameters settings:

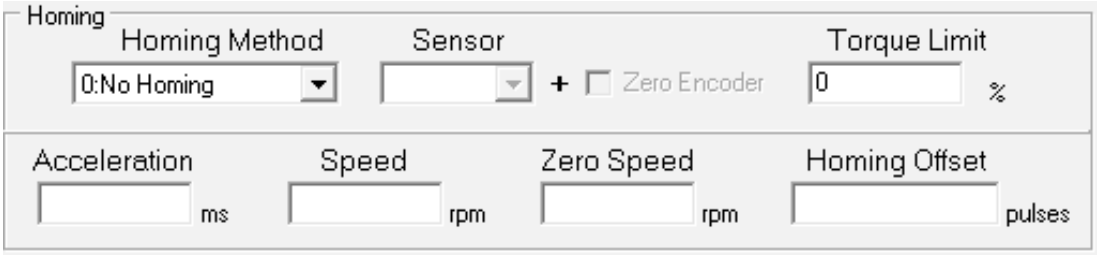

Homing Method
It defines the method of homing. The supported options are:

- **No homing**: disables the homing procedure.
  If this method is set it will not be possible to make the positioning procedure.
- **Homing method 1** (**direct**): the drive makes the motor turn in a **counter-clockwise** direction to search for the homing sensor.
- **Homing method 2** (**reverse**): the drive makes the motor turn in a **clockwise** direction to search for the homing sensor.
- **Immediate**: the current position becomes the home position without moving the motor to search the homing sensor.

Sensor
It selects the type of sensor used for the homing procedure. The available options are **NOpen** (**normally open**) or **NClosed** (**normally closed**).

Zero Encoder
Marking the "**Zero Encoder**" box the home position is set on the **first zero pulse** of the motor feedback after the interception of the homing sensor. This allows you to execute the homing procedure with better precision.

Torque Limit
It allows limit the torqe %, during the homing procedure.

Speed
This parameter sets the speed reference used during the homing process and it is given in "rpm". The admitted values are in ranges between 10 and 1000 rpm.

4.14 Homing - Settings

Acceleration

This is the acceleration and deceleration time for the homing procedure. It is defined in milliseconds and allows values in ranges between 10 and 5000 ms. This time references the maximum motor speed set by using the "Speed Limit" parameter in the "Speed" window, so the **actual acceleration** time can be found utilizing the following formula:

$$T\_acc\_homing\ [ms] = \frac{Speed\_homing\ [rpm]}{Speed\_motor[rpm]} * T\_acc\_sett[ms]$$

Where: **T_acc_homing** = real acceleration time during the homing search process;
Speed_homing = speed set for the homing process ("Speed" parameter);
Speed_motor = motor speed limit set on the interface ("Speed Limit" parameter);
T_acc_set = value inserted in the "Acceleration" parameter.

For example if you have a motor with the following parameters:
- "Speed Limit" (on the "Speed" window) = 3000 rpm;
- "Acceleration" (on the "Homing" window) =500 ms;
- "Speed" (on the "Homing" window) = 1000 rpm.

The acceleration time set in the homing window is the time that the motor should employ to accelerate from 0 rpm to the maximum speed (in this case 3000rpm).
The real acceleration time from 0 rpm to 1000 rpm is 167ms, in fact:

$$T\_acc\_homing\ [ms] = \frac{100\ rpm}{3000\ rpm} * 500\ ms = 167\ ms$$

Zero Speed

This defines the motor's speed during the realignment with the homing sensor and/or during the search for the encoder's zero pulse from the motor feedback after the home sensor is reached.
It is defined in "rpm" and allows values in ranges between 1 and 50 rpms. We suggested utilising low values for this parameter in order to obtain good precision.

Homing Offset

This defines the difference between the zero position for the application and the machine's home position (which is found during homing process). It is measured in pulses and the allowed values are in ranges: $+/-(2^{32}-1)$. This value is assigned to the home position found at the end of a successful homing process. The Homing Offset value is obtained by the execution of the following calculation:

$$Homing\ Offset = n°\ turns\ (also\ not\ integer) * 65536$$

Example: suppose we have an application where the distance between the home position and the zero position of the axis is equal to the distance that the axis can go with a rotation of 4 turns plus an addition 90° mechanical turn.
The first thing to do is to find the number of turns to insert into the formula. In this example: n° turns = 4 + 90°/360° = 4.25 to refer to the fraction of turn above 360°. Now it is possible to calculate utilizing the following operation: 4,25 *65536 = **278528.** This bold number is the value that must be inserted in the "Homing Offset" window.

After the setting of the desired homing parameters save the changes using the "Save To EEPROM" function on the software interface, doing this the drive's setup will become permenent.

4- Digital inputs/output settings:

To *enable/disable/control* a homing procedure "**Digital I/O**" window is used.

A homing procedure needs following settings:

- a digital programmable input with function **Start Homing**;
- a digital programmable input with function **Homing Sensor**;
- an outputput with function **Homing OK**.

For example:

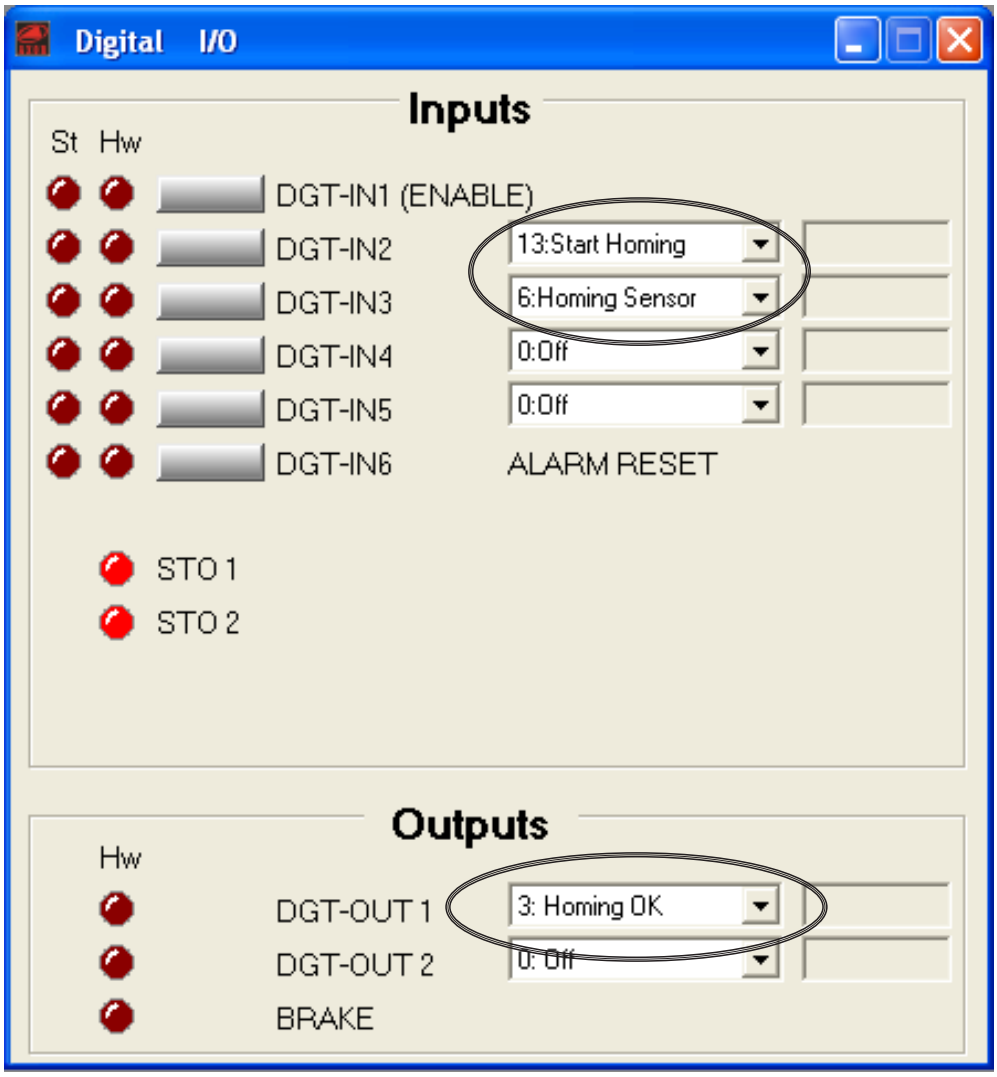

5- Homing sensor connection:

Connect homing sensor to digital input pin set with "**Homing Sensor**" function (see service manual of the drive).

4.15 Homing - Example

Example: Homing sequence

Suppose to do the homing procedure: "b- **Reverse homing procedure with normally opened home sensor**". The procedure is the following:

1- Select the operative mode "**5:Gearing**".
2- In the main window of the interface set the desired homing metod and its parameters. For example:

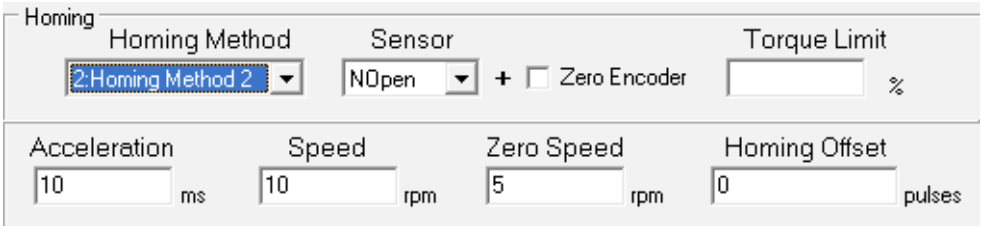

Save all by using the "**Save to EEPROM**" icon.

3- Open the "**Digital I/O**" window and set:
- a digital programmable input with the **Start Homing** function (for example: **DGT-IN3**);
- a digital programmable input with the **Homing Sensor** function (for example: **DGT-IN2**);
- a digital output with the **Homing OK** function (for example: **DGT-OUT1**);

Save all using the "**Save to EEPROM**" icon.

4- Execute homing procedure:

a- Enable the **DGT-IN1** (**Enable**) digital input ⇨ the motor will be on torque.
b- Enable the **DGT-IN3** (**Start Homing**) digital input ⇨ the motor moves to search the home position using the homing parameters saved on the interface. Every time this input is disabled the homing position is resetted.
c- When the home sensor output, connected to the **DGT-IN2** (**Homing Sensor**) digital input, is sensed active (in this example we considered a normally opened sensor), the motor decelerates and inverts its motion.
d- The home position is set when the falling edge of home sensor is received. When this happens the drive enables the **DGT-OUT1** (**Homing OK**) digital output. This value is kept high as soon as the **DGT-IN3** (**Start Homing**) digital input is kept high, independently of the **DGT-IN1** digital input (see (B) in the figure).

Esempio di *procedura di homing*:

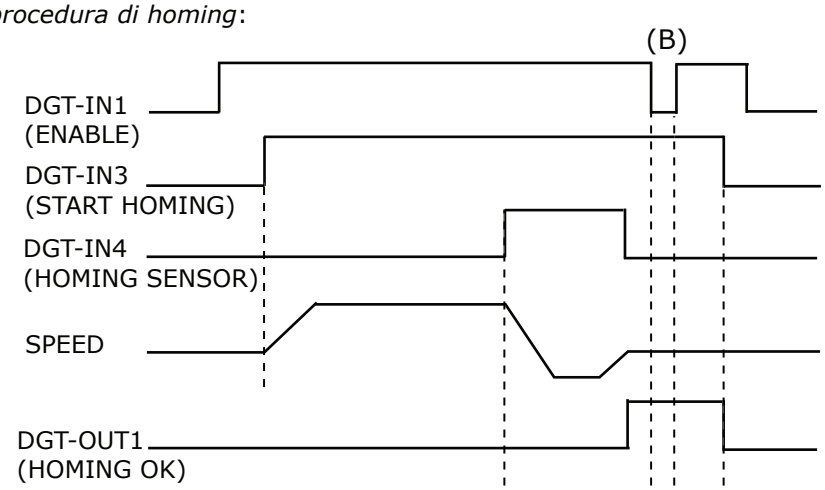

4.15 Homing - Example

Attenzione:

1) La disabilitazione dell'ingresso **DGT-IN3** (**Start Homing**) prima del raggiungimento della posizione di home comporta l'interruzione del processo di homing: nessuna posizione di home viene salvata e il motore decelera utilizzando il parametro "Acceleration" impostato nella finestra di homing. Per effettuare una nuova procedura di homing, riabilitare **DGT-IN3**.

Esempio di *procedura di homing*:

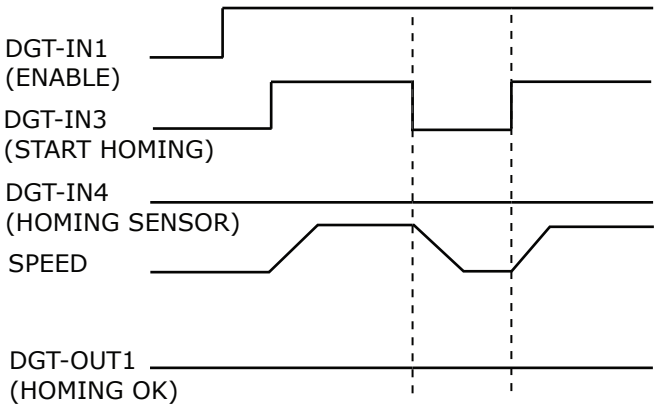

2) La disabilitazione dell'ingresso digitale **DGT-IN1** (**Enable**) prima del raggiungimento della posizione di home comporta l'interruzione del processo di homing: nessuna posizione di home viene salvata e il motore viene lasciato libero (decelera secondo inerzia e attriti). Un nuovo homing ((a) in figura) potrà avvenire solamente disabilitando l'ingresso digitale **DGT-IN3** (**Start Homing**) e quindi riabilitando in successione gli ingressi **DGT-IN1** (**Enable**) e **DGT-IN3** (**Start Homing**).

Esempio di *procedura di homing*:

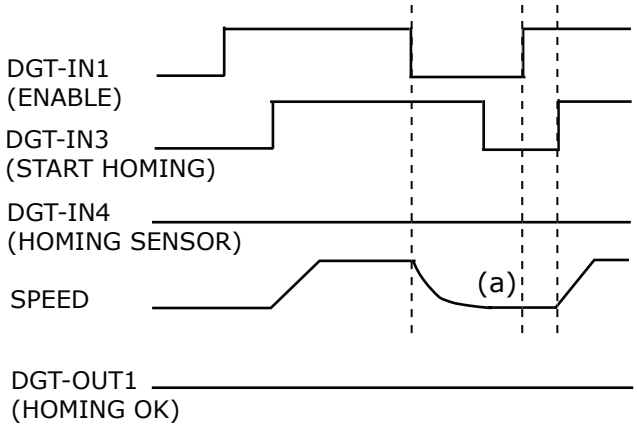

4.16 Analog to Position Control

Mack® Indy can control a motor between two programmable positions corrisponding the min and max voltages at the dedicated pins.

The procedure is the following:

1- Perform the *basic installation procedure*;

2- Use pins **+REF**, **-REF** and **AGND** to *apply the desired speed reference* ⇨ the axis card used in the Numerical Control or PLC can have two different types of analog reference outputs:

- **differential analog output**, in this case connect the positive speed reference to **+REF** and the negative speed reference to **-REF**.

DIFFERENTIAL MODE

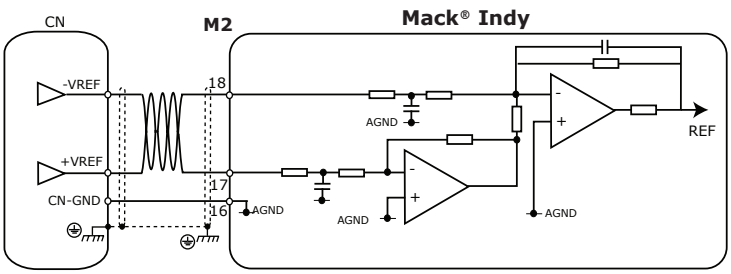

- **common mode reference analog output**, in this case connect the control's analogue output either to the **+REF** terminal or to the **-REF** terminal, depending upon the required rotational direction. Then connect the **AGND** to the reference input terminal that is NOT used.

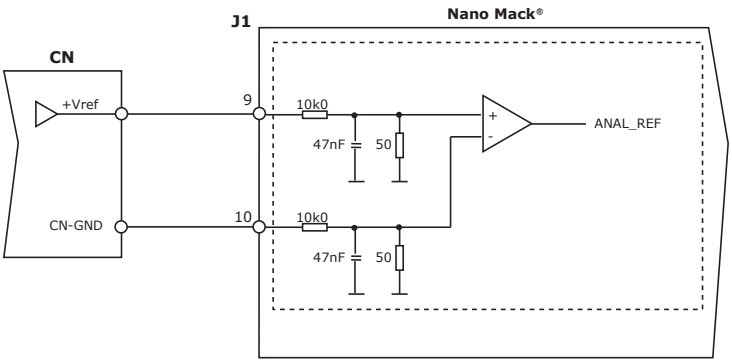

Note:

✓ To change the sense of rotation apply the positive voltage reference to **-REF**, or change the **Rotary Direction** parameter in the **Speed** window (from **Positive** to **Negative**).

3- Execute the *settings of the offset of the velocity analog input reference* ***via Speeder One interface***: open the "**Analog I/O**" window and click on the **Analog 1** icon.

4- Enable analog speed control via ***Speeder One interface***:
a- set the operative mode ***11:Analog to Position*** and keep the **Torque Sat.** box to **0,0**;
b- in ***Digital Speed*** box set the desired speed during movements;
c- in ***Position 1*** and ***Position 2*** set the desired position corresponding to the +10V and -10V at the dedicated inputs;
d- save settings by clicking on icon "**Save data to Eeprom**";
e- enable/disable the drive by using the **Enable**/**Disable** buttons.

ATTENTION: If the rotation is irregular or noisy, it should be necessary to *adjust the gains of the speed loop* by using an adequate procedure (contact Axor).

Chapter 5
SpeederOne Interface

5.1 Speeder One Interface

The Axor software ***Speeder One*** interface allows you to setup, modify and save all parameters, by connecting a PC to the system.

PC minimum preconditions:

Operative system: *Windows and Linux (32/64 bit);*
Graphic sheet: Windows compatible, coloured;
Drive: Hard disk having at least 7 MB free;
Drive for CD-ROM
Interface: free USB port.

Installation procedure:

1- insert the CD, click on the installation file "**Setup.EXE**" that you find on the CD directory, then follow the instructions.
2- at the end of the installation, to start the interface click on the "**Axormb.exe**" file that you find on the directory: "C:\ Program\Axor" (or in the directory selected during installation).
3- update the usb driver form the directory "C:\Programmi\Axor\Data\Driver". If the system (Windows 8 / 10) does not allow you to update the USB driver then contact Axor to get to receve the appropriate procedure.

Attention: The parameter variation, via interface, should be done only by technical qualified personnel.

5.1 Speeder One Interface

The program is started by clicking on "**Axormb.exe**".
The main window "**Axor Servo Drive**" and the "**Select Driver**" window open simultaneously.

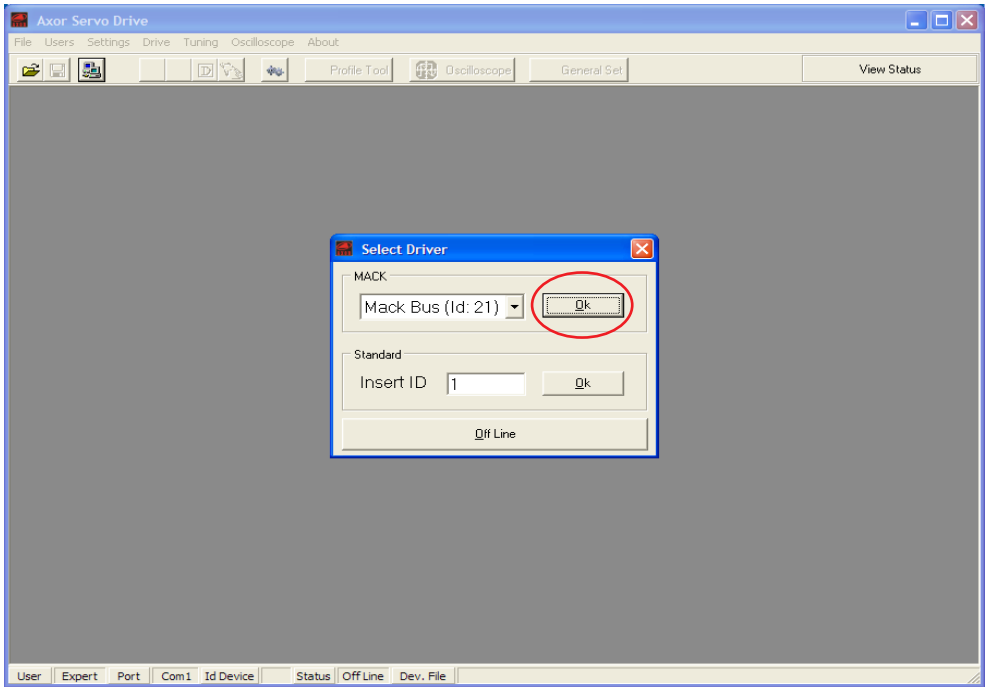

Clicking **OK** (refer to MACK) on the "**Select Driver**" window you are connected to the Mack® Indy.

5.2 Mack® Indy main menu

When **Speeder One** is connected to the Mack® Indy the following window appears:

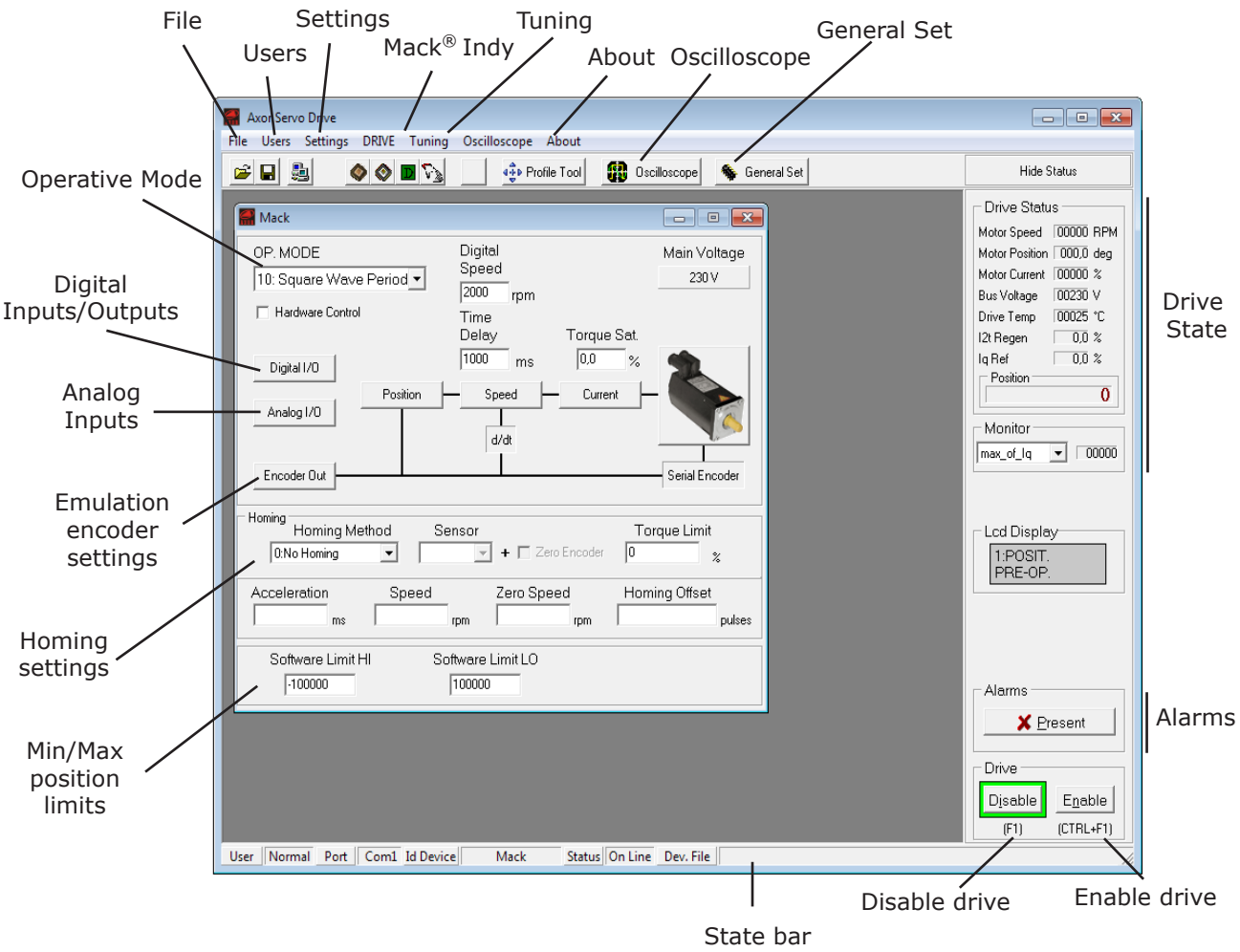

File

By clicking on "**File**" it is possible to *open*, *save* or *save as* a file "*.mki", or to *compare* two configurations or to *exit* the program.

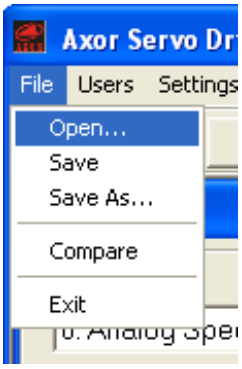

Users

Axor reserved information.

Settings
By clicking on "**Settings**" the "**General Settings**" is displayed.

General Settings
By clicking on "**General Settings**", it is possible to visualize some of the drive's properties, and to impose some generic functions:

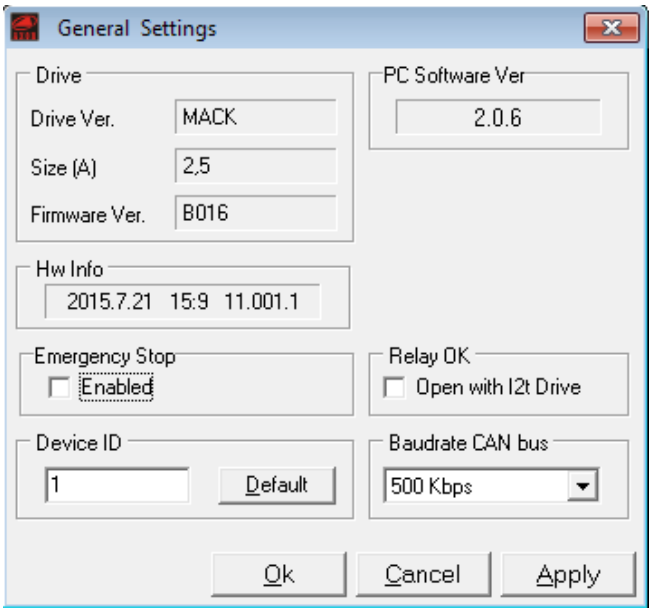

Mack Device
It visualizes the main properties of the drive, such as:
- **Device Ver.** Type of digital connected servodrive: Mack Indy 230;
- **Size (A)** Nominal size in Amperage;
- **Firmware** Firmware version;

PC Software Ver.
It visualizes the software version of *Speeder One*.

Remote Relay OK
It enables or disables the ***Open with I2t Drive*** function, which opening of the programmed **OUTPUT** during the alarm 6: "I^2t Drive".

CanBus ID
This option allows you to set the ID of the drive in the CanBus/EtherCAT network.

Baud rate CAN
This option allows you to set the "baudrate" of the drive during the CanBus communications.

5.2 Mack® Indy main menu

Mack Indy

"**Mack® Indy**" opens the "**Select Driver**" window, the "**Compare with File**" window which allows you to compare two configuration files, while "**Enable**" and "**Disable**" manage the state of the drive.

Tuning

This menu is utilized for the phasing of the motor ("**Motor Phasing**"), the speed offset settings ("**Speed Offset**") or the torque offset settings ("**Torque Offset**").

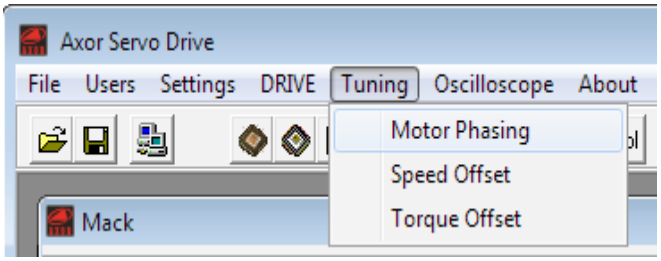

Motor Phasing

When you select this option the program asks if it should execute motor phasing, if confirmed the motor automatically enables and executes. The phase angle is visualized in the "**Motor**" window.

About

This option shows the program version and additional information, for example: "Axor Servo Drive Software 2.0.4".

5.2 Mack® Indy main menu

The program functions may be chosen both from the main menu, as well as from the icons shown below:

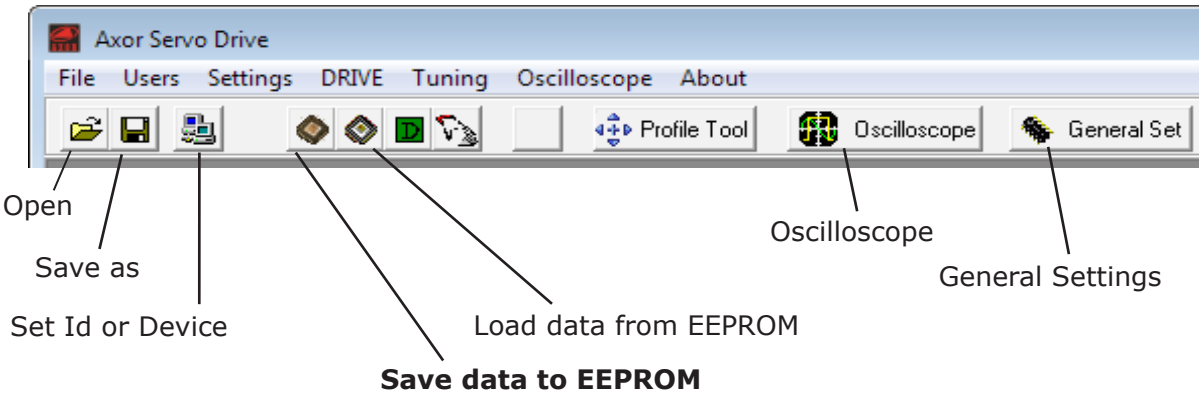

Open
It opens a file "*filename*.mki".

Save as
It saves with name a file with the configuration visualized on the interface at the moment of the memorisation.

Set Id Device
It opens the "**Select Driver**" window, which allows you to select the drive with which you wish to communicate.

Save data to EEPROM
It saves the configuration created on EEPROM of the drive and therefore it makes it definitive. The program asks for confirmation. Successively, power offf and power on the system.
Note: Every time you desire to make modifications and render them operative at the re-start of the drive, the information must be saved on the EEPROM by clicking this icon.

Load data from EEPROM
It loads all the values which are present on EEPROM to the drive.
The program asks for confirmation.

Oscilloscope
It opens the "**Oscilloscope**" window.

General Settings
It opens the "**General Setting**" window.

5.3 Mack® Indy Operative Modes

The "**OP. MODE**" menu allows you to select the operation mode of the drive. With every selection all associated information are automatically pre-disposed.
The Axor digital drives offer the following operation modes:

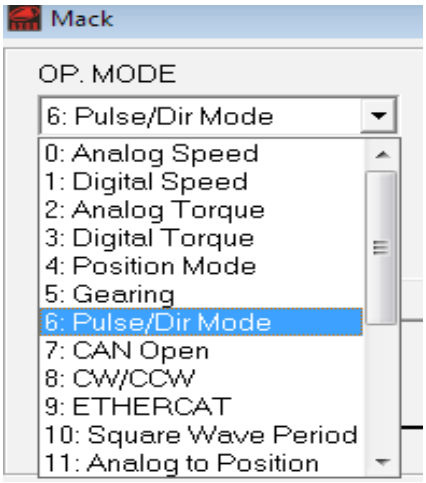

0: Analog Speed
It is speed piloting utilising a digital reference.

1: Digital Speed
It is speed piloting utilising an analogue reference (differential or common mode).

2: Analog Torque
It is torque piloting utilising a digital reference.

3: Digital Torque
It is torque piloting utilising an analogue reference.

4: Position Mode
Not enabled.

5: Gearing
It is possible to pilot the drive with the quadrature signals of an emulated encoder from a Master drive or with the quadrature signals of an incremental encoder from a Master motor (Electrical Axis or Gearing).

6: Pulse/Dir Mode
The position of the motor is controlled through the digital piloting inputs: H.CK/L.CK/0.CK and H.DIR/L.DIR/0.DIR.

7: Can Open
This mode allows you to confi gure and control the drive using CanBus.

8: CW/CCW
The motor is piloted with two digital programmabile quote settable with SpeederOne (for diagnostic use).

9: EtherCAT
This mode allows you to configure and control the drive using EtherCAT.

10: Square Wave
The motor is piloted with a "square wave" signal or with two digital programmable quote (for diagnostic use).

11: Analog to Position
The motor moves between two programmable positions corrisponding the min and max voltages at the dedicated pins.

12÷20: Op Mode 12÷20
Operative modes for future use.

5.4 Mack® Indy Status

Drive Status (Status bar on the right of the main window)

- ✓ **Motor Speed** displays the velocity of the motor in RPM.
- ✓ **Motor Position** displays the rotor position in mechanical degrees.
- ✓ **Motor Current** displays the motor current (in percentages) with respect to twice the rated current of the drive. 50%= rated current, 100%= 2*rated current.
- ✓ **Bus Voltage** displays the voltage of power supply.
- ✓ **Drive Temp** displays the temperature of the Mack® Indy radiator in degrees.
- ✓ **I2t Regen** thermal image of the braking resistor in %.
- ✓ **Position** displays the rotor position in pulses.

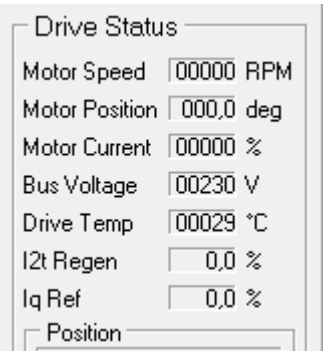

Alarms

Selecting **Alarms** window allows you to visualize the history of the Mack® Indy. alarms and the status of them.

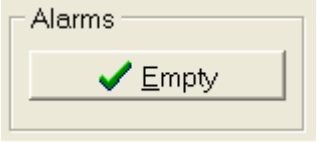

There are not active alarms

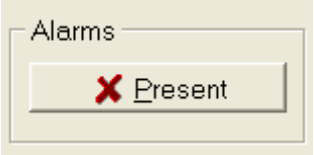

There are active alarms

Clicking on **Empty**/**Present** button "**Alarms**" window opens:

A red dot ● and the red symbol ✓ near the alarm name indicate that the alarm is currently on, while a red checkmark signifies that the alarm has been resolved.
It is possible to reset the *history* of alarms by disabling and enabling the drive or clicking on "**Reset Historic Alarms**".
You can found more information about alarms in the chapter 3.

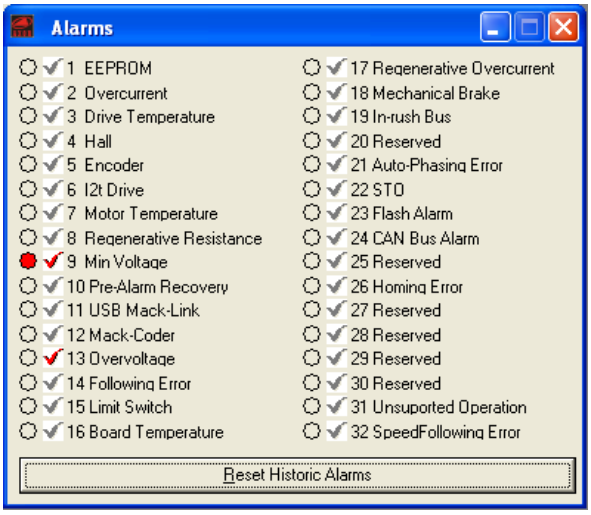

Enable, Disable

By clicking on this button you can enable or disable the drive's torque.
ATTENTION: DRIVE'S ENABLE/DISABLE IS NOT CONSIDERED A SAFETY FUNCTION.

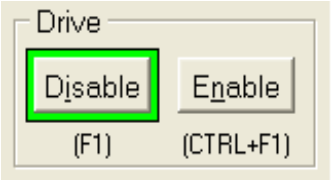

5.5 Speed window Mack® Indy

This window allows modification of the dynamic costants of the drive's **speed loop**.

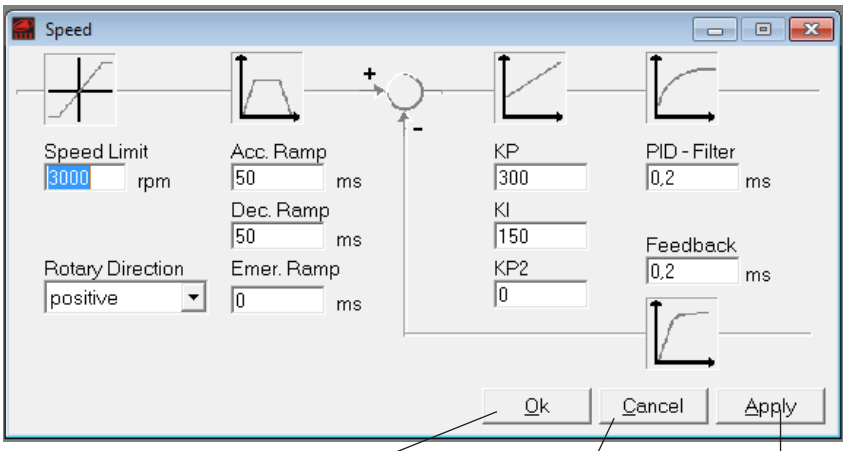

OK confirms the set value and closes the window.

Cancel closes the window without change any parameter.

Apply confirms the set value (which change from red to black), but it does not close the window.

Speed limit

Generally in this box there is the rated speed of the motor coupled with the drive, but it is possible to insert greater value up to 8000rpm max.

Rotary Direction

It allows you to set the rotor's sense of rotation: Positive (CW) or Negative (CCW).

Acc. Ramp

It is possible to insert the value of the acceleration ramp "in ms". The range is between zero and 5000 ms (0-5sec).

Dec. Ramp

It is possible to insert the value of the deceleration ramp "in ms". The range is between zero and 5000 ms (0-5sec).

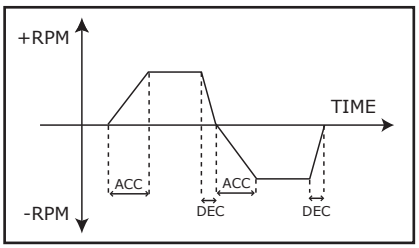

Emer.Ramp

It is possible to insert the value of the deceleration ramp "in ms" during the emergency stop.

PID-Filter

It is a filter on the output of the speed regulator.

Feedback

It is a filter on the feedback speed.

Note: Setting the PID-Filter and Feedback parameters make the system less noisy, therefore non appropriate tuning may cause a less dynamic or instable system.

KP

It is the proportional gain of the speed loop.
This setting optimises the dynamic behaviour of the motor. The range is between zero and 4000.

KI

It is the integral gain of the speed loop.
This setting optimises the dynamic behaviour of the motor. The range is between zero and 4000.

KP2

If enabled, it is the proportional gain of the speed loop when the speed is 0 rpm.

5.6 Current window Mack® Indy

This window allows you to modify the dynamic costants of the drive's **current loop**.

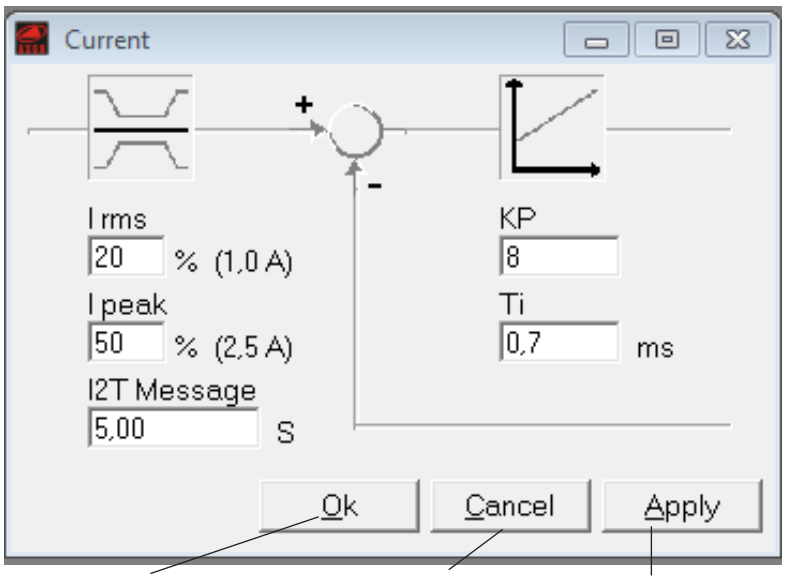

OK confirms the set value and closes the window.

Cancel closes the window without change any parameter.

Apply confirms the set value (which change from red to black), but it does not close the window.

I rms
In this box it is possible to insert the percentage value of the rated current furnished by the drive. The numerical range is between 1 and 50 and it is referred to the peak current value.
Example: suppose we have a drive size 8/16, if we insert into this box the value 15%, we'll have a setting of rated current equal to 2,4A (in fact 16X15/100=2,4), so the drive will provide a rated current equal to 2,4A to the motor.

I peak
In this section it is possible to insert the percentage value of the peak current furnished by the drive. The numerical range is between 1 and 100
Example: suppose we have a drive size 8/16, if we insert into this box the value 75%, we'll have a setting of peak current equal to 12A (in fact 16X75/100=12), so the drive will provide a peak current equal to 12A to the motor.

The value of nominal and peak current is RMS.

I2T Message
Time of the peak current.
Typically with an adjustment of Ipeak = 100%, the time will be 5 seconds.
Not to change this parameter before consulting Axor.

KP
It is the proportional gain of the current loop. This adjustment allows for optimizing the dynamic behaviour of the motor's current loop. The numerical range of this parameter varies from 0 up to 999.
Not to change this parameter before consulting Axor bacause it is closely related to the motor.

TI
It is the integral time in "ms" of the current loop.
The numerical range of this parameter varies from 0 up to 999ms.
Not to change this parameter before consulting Axor bacause it is closely related to the motor.

5.7 Encoder Out window Mack® Indy

With this parameter you can set the number of pulses per turn on encoder emulation outputs available to the numerical controller or PLC.

Using an encoder with **N** pulse/rev, it is possible to set **N**, **N/2**, **N/4**, **N/8**, **N/16**, **N/32**, **N/64**, **N/128** pulse/rev.

Example: Utilizing a motor transducer with 2048 pulse/rev, the setable values are: 2048, 1024, 512, 256, 128, 64, 32 and 16.

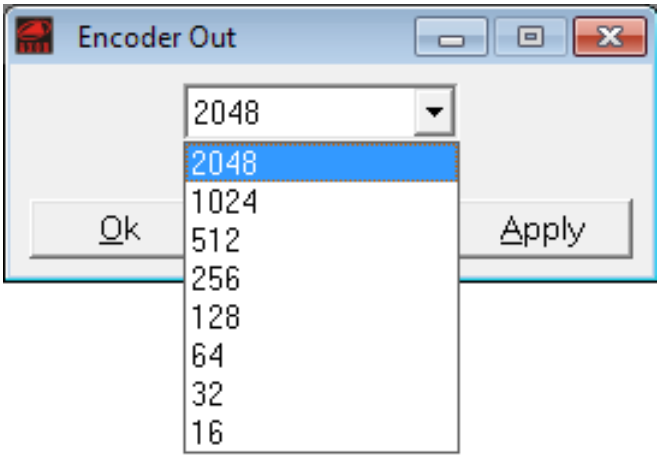

The figure below illustrates the typical encoder emulation output pulses when the motor turns *clockwise*: the emulation output pulses are emitted under the form of two signals, **A** and **B**, which are electrically staggered by 90° and a zero signal, **Z**.

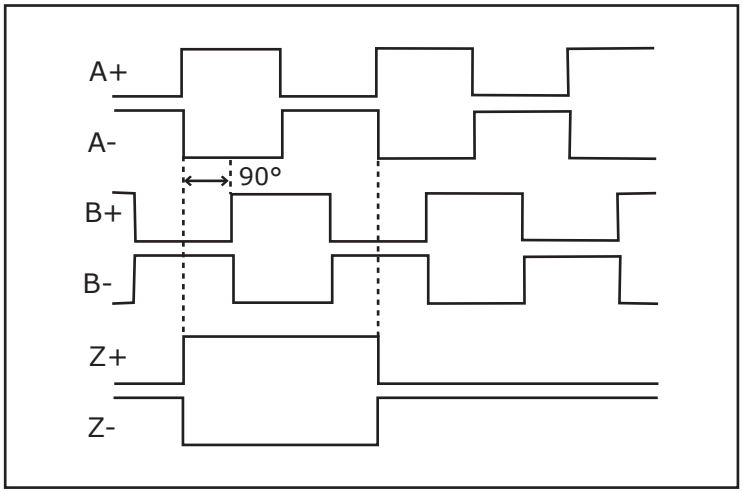

5.8 Motor window Mack® Indy

Clicking this icon it is possible to modify items relating to the **motor**'s characteristics.

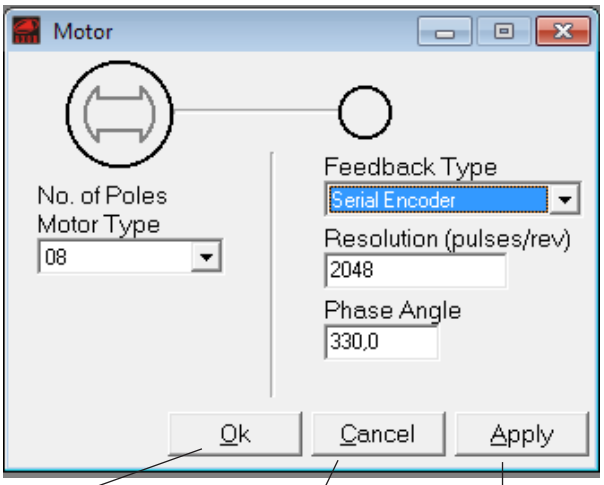

OK confirms the set value and closes the window.

Cancel closes the window without change any parameter.

Apply confirms the set value (which change from red to black), but it does not close the window.

No. of Poles
Number of motor poles. It is possible to set 2, 4, 6, 8, 10, and 12 poles. The value pre-set as a default is 6 poles.

Feedback Type
It permits to select the type of motor feedback: Serial Encoder (MackCoder), Absolute Multiturne Encoder (Absolute Encoder) or Commutation Encoder.

Resolution (pulses/rev)
Insert in this section the value of Encoder pulses/rev.

Phase angle
In this section the phasing angle of the motor, previously calculated with the "**Tuning** ⇨ "**Motor Phasing**" procedures, is visualized.

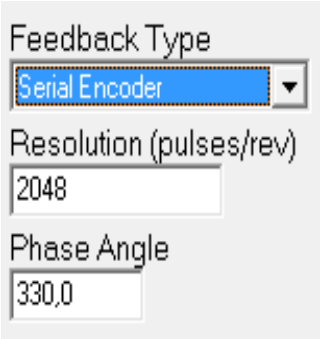

5.9 Analog I/O window Mack® Indy

This window allows you to control and condition the analogic signal of the differential or common mode reference from the external controller or the analogic signal of the torque reference (Tp.RC input).

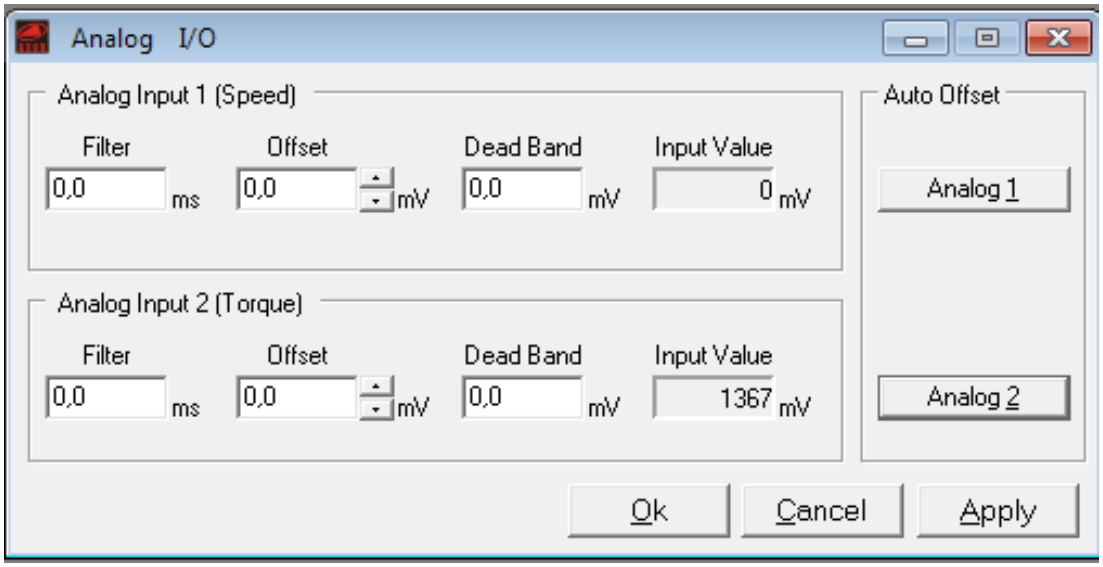

Filter
Filter in "ms" on the analog input signal.

Offset (Speed)
Voltage in "mV" on the +/-REF analog inputs taken as zero speed reference (0 rpm). This value is calculated using the "**Tuning** ⇨ **Speed Offset**" procedure or by clicking on the "**Speed**" button of the "Analog I/O" window, otherwise it is possible to increase or decrease this value using the up/down arrows near the "Offset" window.

Offset (Torque)
Voltage in "mV" on the Tp.RC analog input taken as zero torque reference. This value is calculated using the "**Tuning** ⇨ **Torque Offset**" procedure or by clicking on the "**Torque**" button of the "**Analog I/O**" window, otherwise it is possible to increase or decrease this value using the up/down arrows near the "**Offset**" window.

Dead Band (Speed)
If the voltage on the +/-REF analog inputs is within the range [-Dead Band, +Dead Band], the analog speed reference is zero (0 rpm).

Dead Band (Torque)
If the voltage on the Tp.RC analog input is within the range [-Dead Band, +Dead Band], the analog torque reference is zero.

Input Value
It visualises in "mV" the voltage measured on the analog inputs This value depends by the Offset, the Filter and the Dead Band settings.

Auto Offset
This button *automatically* execute the settings of the offset of the torque offset settings ("**Analog2**").

5.10 Digital I/0 window Mack® Indy

This window allows you to modify **via software** the status of the **programmable digital inputs** and to control the hardware status of the **digital inputs and outputs**.

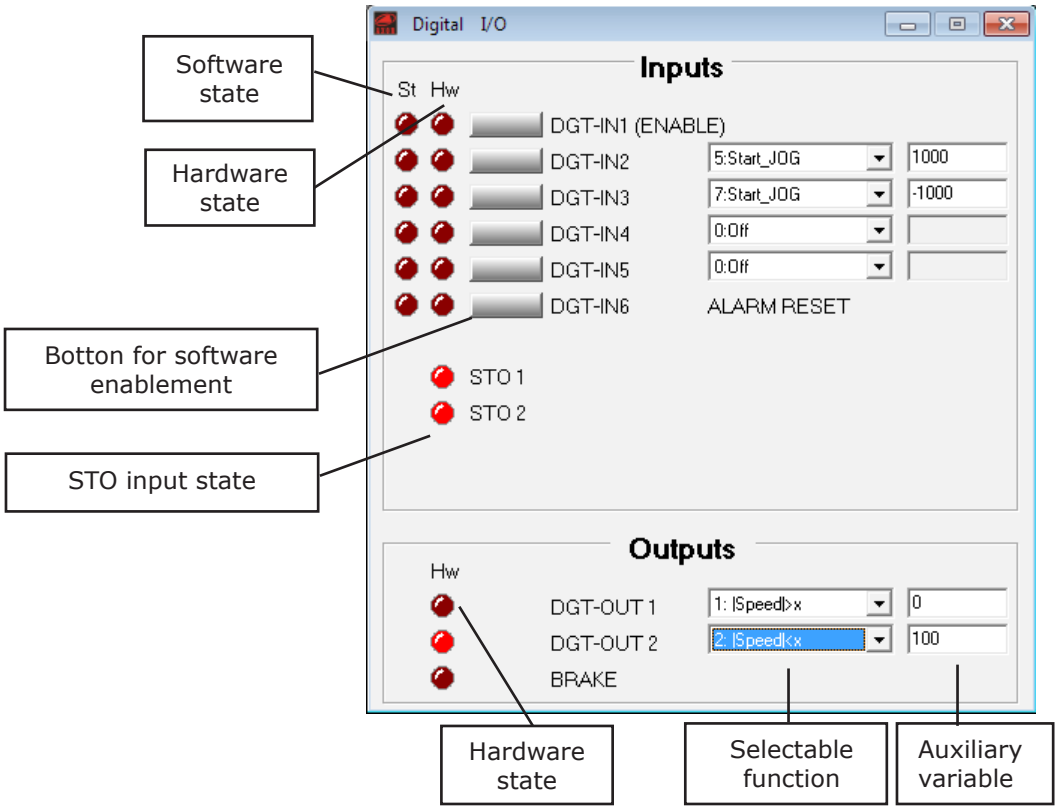

The "**St**" led visualises the **status (software)** of the digital inputs. Clicking on the button near the name of the digital input, the "St" led becomes red and a high logic signal is present on the input.

The "**Hw**" led visualises the **hardware status** of the digital input, if it is red a voltage is present on the input.

The "**Hw**" led, about digital outputs, visualises the **hardware status** of the digital outputs, if it is red the output is closed..

Near the name of each digital input/output there are two fields:
- ✓ There is a menu that allows you to select a **function**;
- ✓ There is a field where you can insert the **auxiliary variable** if necessary.

Digital inputs not programmable:

INPUT	FUNCTION	DESCRIPTION
	INPUT	
IN1	**Enable**	It enables the motor rotation.
IN6	**Reset Fault**	It allows the reset the "resettable" alarms.

5.10 Digital I/0 window Mack® Indy

The **DGT-IN2**...**DGT-IN5** inputs can be set to enable the following functions:

FUNCTION	DESCRIPTION
Off	With this settings there is not a particular function assigned to the input.
Ref-On	It enables the motor rotation.
PStop	Positive limit switch. A low logical signal on this input disables the "CW" rotation of the motor.
NStop	Negative limit switch. A low logical signal on this input disables the "CCW" rotation of the motor.
Brake	It enables the external manage braking by the user.
Start Homing	It is used to start/stop the homing procedure.
Homing Sensor	Homing sensor.
Start Jog	It enables a movement having the following parameters: • acceleration time that is equal to the homing acceleration time; • speed (in rpm) equal to the value set in the auxiliary variable; • target equal to the positive extreme (PSTOP software) of the axis if the speed is positive, or equal to the negative extreme (NSTOP software) of the axis if the speed is negative; • deceleration time that is equal to the homing acceleration time.
Start_Task_n° (not enabled)	It enables the task set by the auxiliary variable. There is not possibility of blending with this function.
Start Task I/O (not enabled)	It enables the task set by the digital inputs DGT-IN5...DGT-IN9. There is not possibility of blending with this function.
Start Sequence (not enabled)	It enables a sequence of tasks. The first task is set by the digital inputs DGT-IN5...DGT-IN9, while the next tasks are set by using the "Next Profile" parameter associated to each task. At the end of each task the following automatically starts.
Start Next (not enabled)	It enables a sequence of tasks. The first task is set by the digital inputs DGT-IN5...DGT-IN9, while the next tasks are set by using the "Next Profile" parameter associated to each task. At the end of each task the motor stops, the user has to click the task button (clicking twice: disabling and enabling) in order to start the next task of the sequence.

Very Important Notes:

• The function just illustrated are selectable on all the digital inputs, otherwise the functions: Ref-On, PStop, NStop, Brake, Homing Sensor, Start Homing, Reset Alarm can be set on one input at a time.

• Before changing the function on a programmable input make sure that the function is disabled.
For example:
The "Start Homing" function is not active with a <u>low</u> signal on the dedicated input.The "Pstop" function is not active with a <u>high</u> signal on the dedicated input.

• Remember to save to the EEPROM all settings made on the programmable digital input in order to make them permanent.

5.10 Digital I/0 window Mack® Indy

Digital outputs not programmable:

OUTPUT	FUNCTION	DESCRIPTION
OUTPUT		
OUT3	**Brake**	Digital output that allows to control an electromechanical brake motor via an external relay.

In the following table there are the setting functions for the two digital programmable outputs (**DGT-OUT1** and **DGT-OUT2**):

FUNCTION	DESCRIPTION
Off	Selecting this function the output will always be open.
|Speed|>x	If the absolute value of the actual speed is greater than the value inserted in the auxiliary variable, the output will be closed. On the contrary, if the absolute value of the actual speed is less than the value inserted in the auxiliary variable the output will be opened.
|Speed|<x	If the absolute value of the actual speed is less than the value inserted in the auxiliary variable, the output will be closed. On the contrary, if the absolute value of the actual speed is greater than the value inserted in the auxiliary variable the output will be opened.
Homing OK	The output will be closed after a complete and successful homing procedure. At the start of every new homing procedure the output will be opened.
I2t	The output will be closed if the I^2t condition is reached. When this condition comes down the output will be opened.
|Irms%|>x	If the absolute value of the actual current is greater than the value inserted in the auxiliary variable, the output will be closed. On the contrary, if the absolute value of the actual current is less than the value inserted in the auxiliary variable the output will be opened.
|Irms%|<x	If the absolute value of the actual current is less than the value inserted in the auxiliary variable, the output will be closed. On the contrary, if the absolute value of the actual current is greater than the value inserted in the auxiliary variable the output will be opened.
Error	With this function the output is closed if one or more alarms are present. When all alarm are cleared the output will be opened.
Ready	When the control circuitry is powered up (with a minimum delay), the output will be closed.
|Err Pos|>x	If the absolute value of the actual Position Error is greater than the value inserted in the auxiliary variable, the output will be closed. On the contrary, if the absolute value of the actual current is less than the value inserted in the auxiliary variable the output will be opened. The actual position error can be monitored in main window of Speeder One interface by selecting Posit_Err option in Analog Out1 or Analog Out2 menu.
|Err Pos|<x	If the absolute value of the actual Position Error is less than the value inserted in the auxiliary variable, the output will be closed. On the contrary, if the absolute value of the actual current is greater than the value inserted in the auxiliary variable the output will be opened. The actual position error can be monitored in main window of Speeder One interface by selecting Posit_Err option in Analog Out1 or Analog Out2 menu.

"Pulse/Dir"

If the "**6:Pulse/Dir Mode**" operative mode is set, the "**Position**" window is the following:

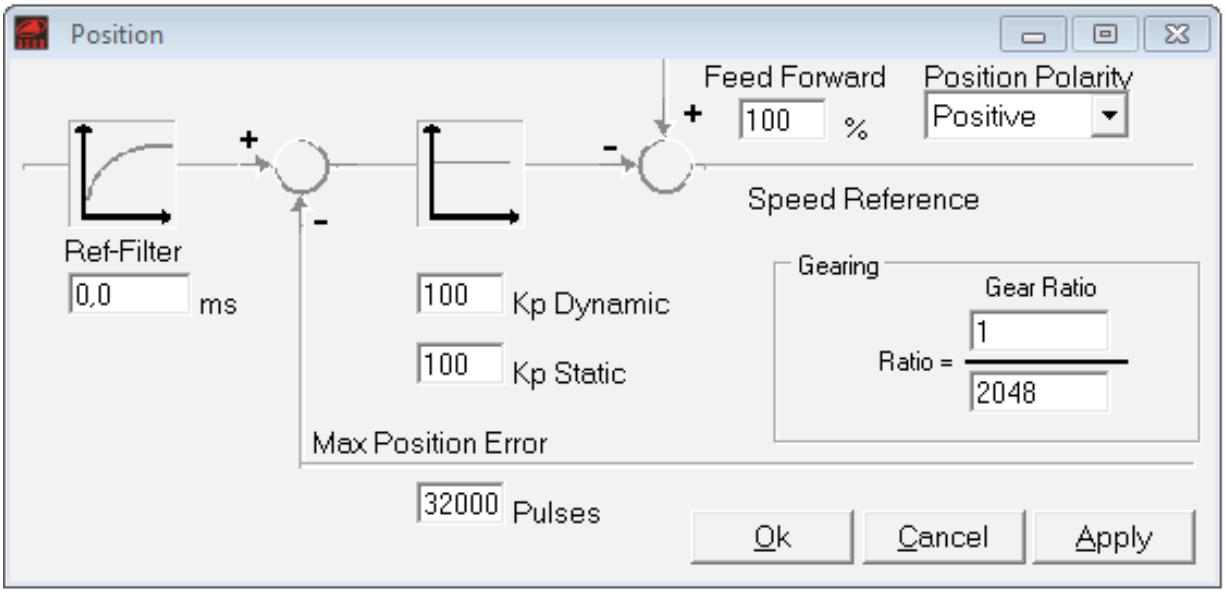

The **Feedforward**, **Kp Dynamic**, **Kp Static**, **Max Position Error** and **Ref-Filter** parameters have the same functions illustrated in the preceding page, but the **Gear Ratio** windows are significantly different.

Gear Ratio
Transmission ratio between revolutions(numerator) and pulses(denominator).

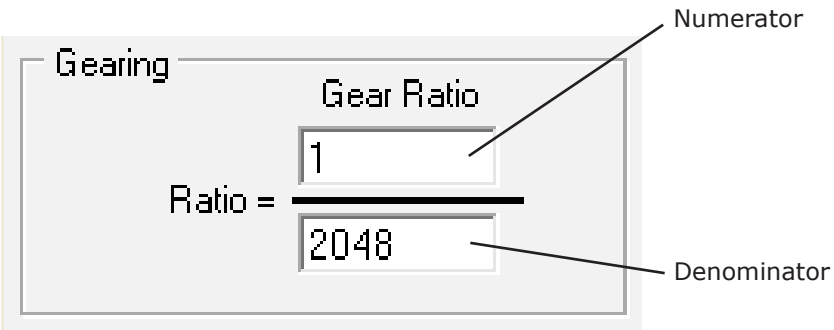

It is suggested to use values around 1, especially in systems that requires high precision.

You can find more information about Pulse/Direction mode on Chapter 4) Operative Modes.

5.12 Homing window Mack® Indy

In the main window of the interface there is an area where you can set the parameters of the **Homing procedure**:

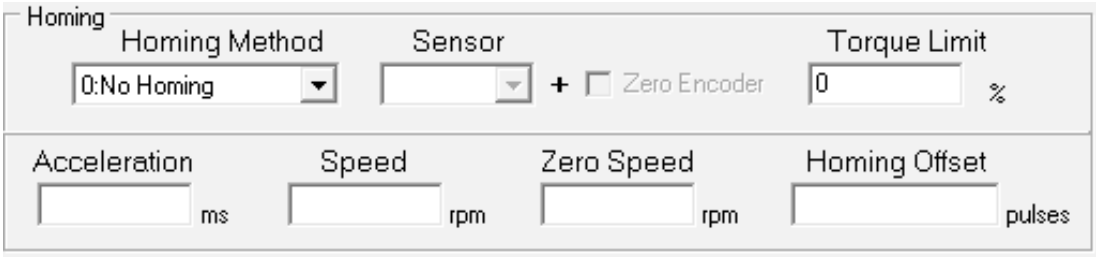

The homing procedure uses the **signal of the homing sensor** and, eventually, the **zero signal of the encoder**.
Before start a positioning it is necessary execute a successful homing procedure.

Homing Method
It defines the method of homing. The supported options are:

- **No homing**: disables the homing procedure.
  If this method is set it will <u>not</u> be possible to make the positioning procedure.

- **Homing method 1** (**direct**): the drive makes the motor turn in a **counter-clockwise** direction to search for the homing sensor.

- **Homing method 2** (**reverse**): the drive makes the motor turn in a **clockwise** direction to search for the homing sensor.

- **Immediate**: the current position becomes the home position without moving the motor to search the homing sensor.

Sensor
It selects the type of sensor used for the homing procedure. The available options are **NOpen** (**normally open**) or **NClosed** (**normally closed**).

Zero Encoder
Marking the "**Zero Encoder**" box the home position is set on the **first zero pulse** of the motor feedback after the interception of the homing sensor. This allows you to execute the homing procedure with better precision.

Torque Limit
It allows limit the torqe %, during the homing procedure

Speed
This parameter sets the speed reference used during the homing process and it is given in "rpm". The admitted values are in ranges between 10 and 1000 rpm.

5.12 Homing window Mack® Indy

Acceleration

This is the acceleration and deceleration time for the homing procedure. It is defined in milliseconds and allows values in ranges between 10 and 5000 ms. This time references the maximum motor speed set by using the "Speed Limit" parameter in the "Speed" window, so the **actual acceleration** time can be found utilizing the following formula:

$$T\_acc\_homing\ [ms] = \frac{Speed\_homing\ [rpm]}{Speed\_motor[rpm]} * T\_acc\_sett[ms]$$

Where: **T_acc_homing** = real acceleration time during the homing search process;
Speed_homing = speed set for the homing process ("Speed" parameter);
Speed_motor = motor speed limit set on the interface ("Speed Limit" parameter);
T_acc_set = value inserted in the "Acceleration" parameter.

For example if you have a motor with the following parameters:
- "Speed Limit" (on the "Speed" window) = 3000 rpm;
- "Acceleration" (on the "Homing" window) =500 ms;
- "Speed" (on the "Homing" window) = 1000 rpm.

The acceleration time set in the homing window is the time that the motor should employ to accelerate from 0 rpm to the maximum speed (in this case 3000rpm).
The real acceleration time from 0 rpm to 1000 rpm is 167ms, in fact:

$$T\_acc\_homing\ [ms] = \frac{100\ rpm}{3000\ rpm} * 500\ ms = 167\ ms$$

Zero Speed

This defines the motor's speed during the realignment with the homing sensor and/or during the search for the encoder's zero pulse from the motor feedback after the home sensor is reached.
It is defined in "rpm" and allows values in ranges between 1 and 50 rpms. We suggested utilising low values for this parameter in order to obtain good precision.

Homing Offset

This defines the difference between the zero position for the application and the machine's home position (which is found during homing process). It is measured in pulses and the allowed values are in ranges: $+/-(2^{32}-1)$. This value is assigned to the home position found at the end of a successful homing process. The Homing Offset value is obtained by the execution of the following calculation:

$$Homing\ Offset = n°\ turns\ (also\ not\ integer) * 65536$$

Example: suppose we have an application where the distance between the home position and the zero position of the axis is equal to the distance that the axis can go with a rotation of 4 turns plus an addition 90° mechanical turn.
The first thing to do is to find the number of turns to insert into the formula. In this example: n° turns = 4 + 90°/360° = 4.25 to refer to the fraction of turn above 360°. Now it is possible to calculate utilizing the following operation: 4,25 *65536 = **278528.** This bold number is the value that must be inserted in the "Homing Offset" window.

After the setting of the desired homing parameters save the changes using the "Save To EEPROM" function on the software interface, doing this the drive's setup will become permenent.

You can find more information about homing on Chapter 4) Operative Modes.

5.13 Standard configuration files Mack® Indy

Using the Axor's *Speeder One* software you can select some *standard configuration files* to allow the drive to be setup for brushless servomotors.

To select a "standard" configuration file with the software:

1) Open the ***Speeder One*** interface.

2) In the main window select the "**Open**" icon (otherwise select "**File**" and then "**Open**").

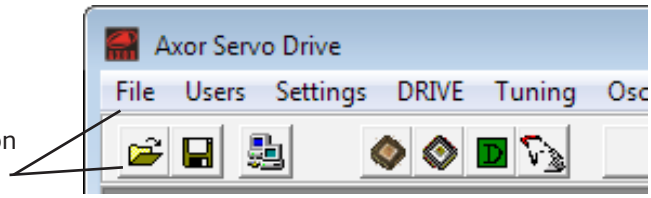

3) Select a file in the directory: C:\Program\Axor\Data\Devices\MackIndy, and then press "**Open**".

4) Save the values loaded using the "**Save Data To EEPROM**" button.

5) Disable and enable the drive.

A standard configuration file loads the following **settings**:

- **OP.MODE**: the operative mode "**6:Pulse/Dir Mode**" is selected.
- **"Motor" window**: sets for 6 motor pole, with or without brake, encoder (2048 ppr) or resolver (2 pole) feedback.
- **"Current" window**: gains and currents (rated and peak) are set to work with a specific motor, while I^2t value ("I2t Message" parameter) is set reference to the drive.
- **"Speed" window**: gains are set for a motor without load (free).
  The Acc and Dec ramp are set at 0ms; while the Emergency ramp is set at 100ms.
  The Speed Limit is set equal to the max speed supported by the motor.
  Others parameters are set at 0.
- **"Encoder Out" window**: The pulses per turn of the simulated encoder are set equal to those of the motor's encoder.
- **"Digital Speed" window** (operative modes: "Digital Speed", "Square Wave"): the speed reference is set to 0 RPM.
- **"Square Wave Period"** operative mode: the semi-period of the square wave is set to 500 ms.
- **"Digital I/O" window**: all inputs and outputs are set with "0:Off" function.
- **"Analog I/O" window**: the filter times, the offsets and the deadband are set to 0.

5.13 Standard configuration files Mack® Indy

The files are made in this conditions:
- Drive standard.
- Motor with no load (free to run).
- Encoder feedback 2048 pulse/rev.
- Motor with or without electromechanical brake.

Notes:

• **The loading of a file and the parameter variation should be done only by qualified technical personnel.**

• The standard configuration files are not protected against accidental changing, so after loading a new file it is necessary to control all the parameter, in particular:
- Main voltage
- Number of motor pole (*Motor* window)
- Feedback (*Motor* window)
- Irms (*Current* window)
- Ipeak (*Current* window)
- Rated speed (*Speed* window)

5.14 Oscilloscope Mack® Indy

Clicking on "**Oscilloscope**" it is possible to open the digital oscilloscope implemented into the Axor *Speeder One* interface.
The oscilloscope functions as a normal two channel digital oscilloscope and it allows visualizing: *motor speed*, *phase current*, *position error*, etc.

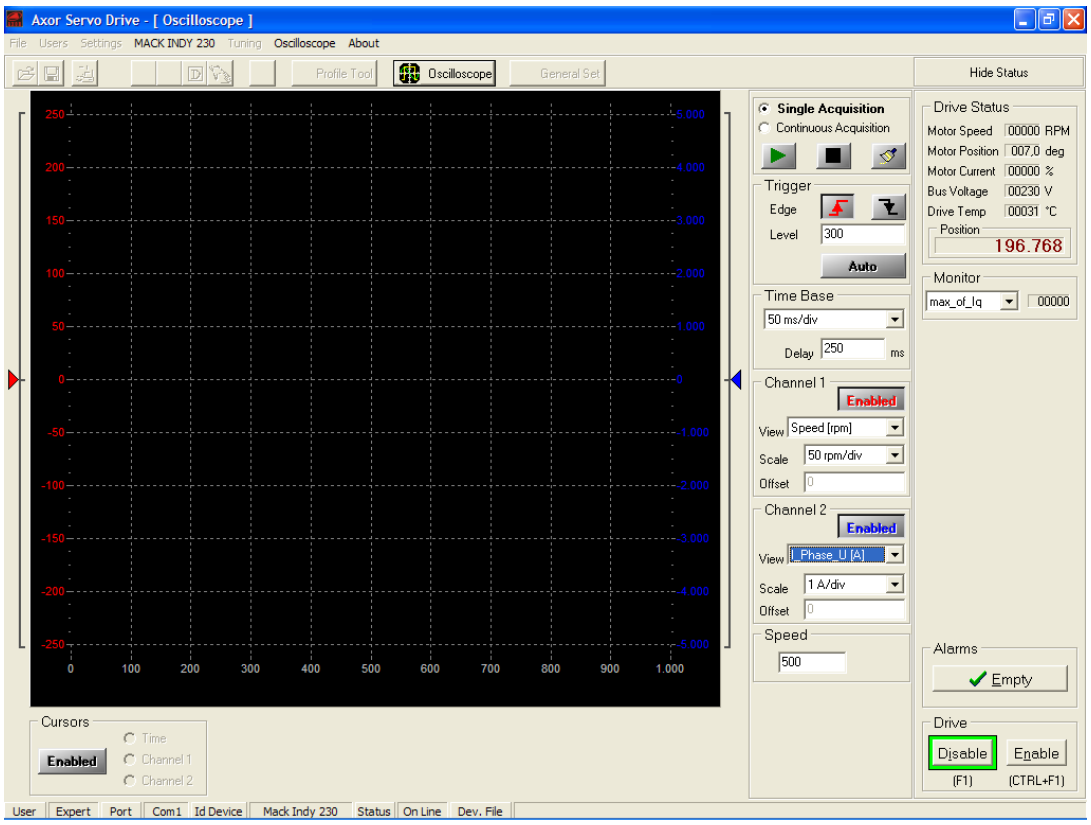

Oscilloscope window

DATA ACQUISITION:

Data acquisition settings

Single Acquisition
Selecting the *Single Acquisition* option, the oscilloscope's behaviour is dependant upon enablement/disablement of a trigger event:

CASE 1: If the trigger event is enabled on rising edge or falling one of signal in Channel 1, the oscilloscope waits for the first trigger event. At trigger arrival the trace is visualized and data acquisition is stopped. To capture a new trigger event it is necessary to start a new acquisition by clicking on the icon ▶.

CASE 2: If trigger event is disabled, the oscilloscope acquires new data, it visualizes it, then it stops. To upgrade the trace it is necessary to start a new acquisition by clicking on the icon ▶.

Continuous Acquisition
Selecting the *Continuous Acquisition* option, the oscilloscope's behaviour depends upon enablement/disablement of trigger event:

CASE 1: If trigger event is enabled on the rising or falling edge of a signal in Channel 1, oscilloscope waits until the first trigger event. At trigger's arrival the trace is visualized and it is updated at each trigger event.

CASE 2: If trigger is disabled, oscilloscope continually acquires new data and updates traces.

START/STOP/RESET DATA ACQUISITION:

It starts data acquisition in both modes *Single* or *Continuous Acquisition.*

It stops data acquisition in Continuous Acquisition mode, or in Single Acquisition mode if there is not a trigger event.

It resets the window eliminating the visualized traces.

TRIGGER EVENT:

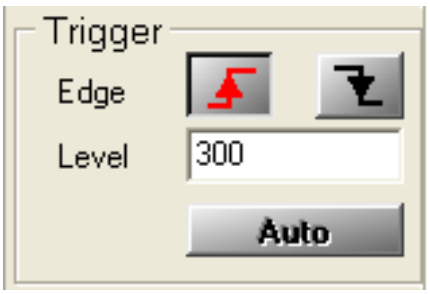

Trigger event setting

Enabling trigger event it is possible to acquire and visualize the traces only at the occurrence of a definite signal in Channel 1; that signal is characterized by a ring edge or a falling one and by a level (or amplitude). To enabled a trigger event it is necessary:

1st to set the rising or falling edge (**Edge** icons);
2d to set the desired level (**Level** parameter).

Clicking the **Auto** button it is possible to disable the trigger event ⇒ the oscilloscope will continue to acquire new data and update the traces.
You should use the **Auto** trigger function:

- during first acquisition, in order the know the scale of input signals;
- in presence of low repetitive signal rates;
- in presence of dc signals.

TIME BASE:

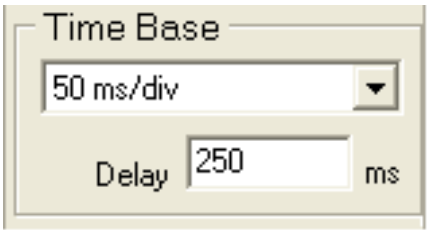

Time base setting

Time Base
This allows you to change the scale of the horizontal axis, the time base. The min. resolution is 1ms/div, while the max is 1s/div.

Delay
If the trigger event is enabled the value set in **Delay** fixes the point, in the horizontal axis, where the trigger event will be visualized; on the contrary, if the trigger event is disabled the value set in Delay is ignored.
The default value set for the Delay parameter is in the middle window.

SIGNAL SETTING:

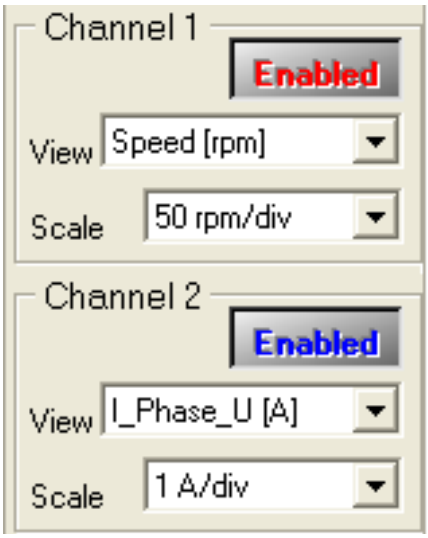

Input signal setting

Channel 1 (View) and Channel 2 (View)
This allows you to select the signal to visualize. The different options are as follows:
- the motor speed: **Speed [rpm]**
- the phase U current: **I_Phase_U [A]**
- the position error: **Posit_Err [Pulses]** (not yet enabled)
- the quadrature current: **Iq[A]**

The Channel 1 is enabled if the reference button **Enabled** is red, while Channel 2 is enabled if the reference button **Enabled** is blue.
To disable a channel click on the Enabled button ⇒ **Disabled** appears.

Channel 1 (Scale) and Channel 2 (Scale)
The unit of vertical scale is automatically set by choosing an input signal:
- **rpm/div** for speed
- **mA/div** or **A/div** for current
- **Pulses/div** for position error

However, it is possible to change the scale selecting from values in the **Scale** menu.
For Channel 1 the scale will be visualized in red on the left, while for Channel 2 the scale will be visualized in blue on the right.

5.14 Oscilloscope Mack® Indy

EXAMPLE: Suppose we want to visualize by digital oscilloscope ***motor speed*** and ***phase current***.

The procedure is described below:

1- Follow the *base installation procedure* illustrated in the previous chapter.

2- Open the *Speeder One* interface and connect to the drive.

3- Select, for example, the operative mode "**Square Wave**", then set a *speed reference* equal to 1000rpm and a *square wave period* equal to 2000ms.

4- Open the **Oscilloscope** window by clicking on oscilloscope icon.

5- In the Oscilloscope window set the *initial parameters* (see *Fig.6*):
   a) Select **Continuous Acquisition**.
   b) Trigger ⇨ click on **Auto** button.
   c) Time base ⇨ set to 200ms/div.
   d) Channel 1: View ⇨ select Speed[rpm].
      Scale ⇨ select 500rpm/div.
   e) Channel 2: View ⇨ select I_Phase U[A].
      Scale ⇨ select 2A/div.

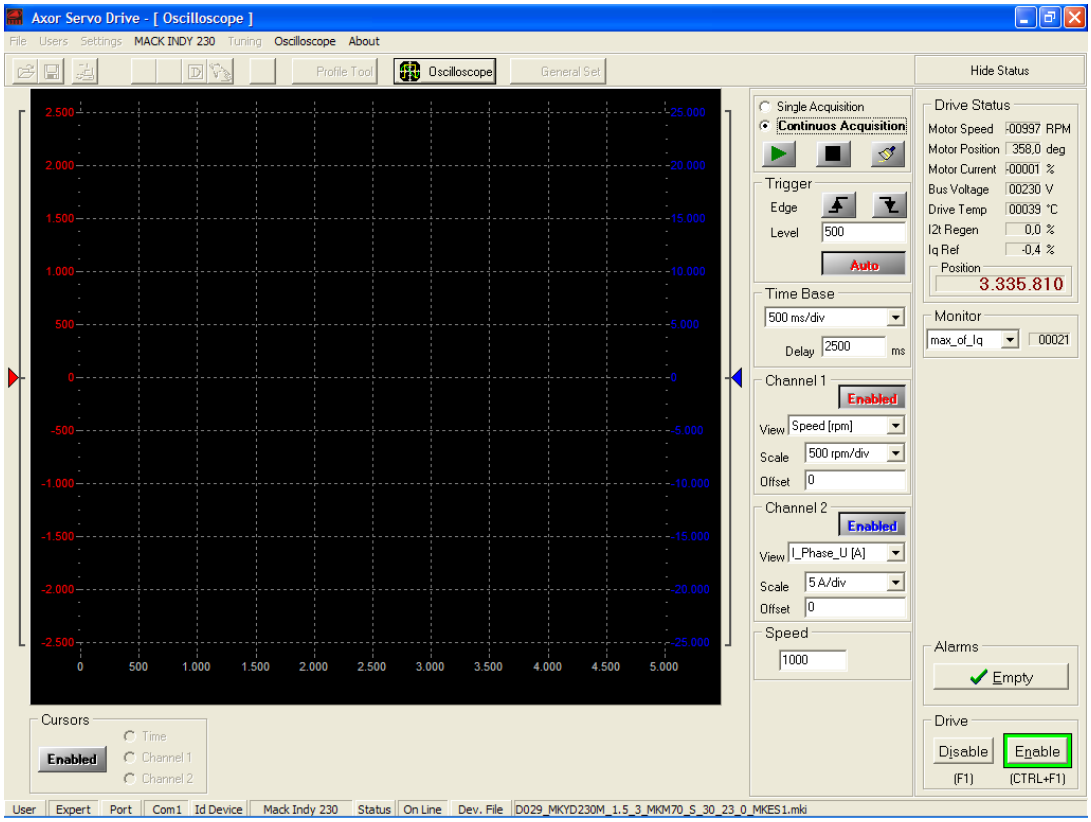

Impostazione parametri iniziali

6- Enable the drive by clicking the **Enable** icon.

7- Start data acquisition by clicking the icon ▶. Wait a few seconds in order to acquire traces:

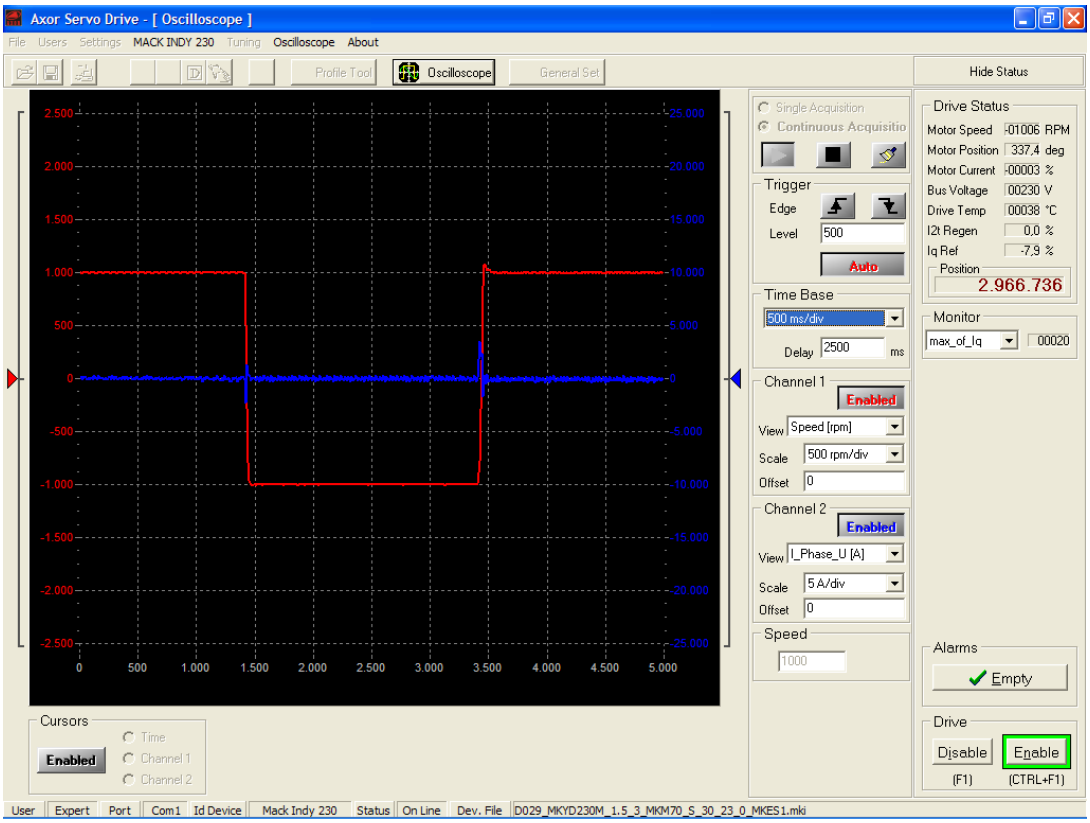

Traces visualized using initial parameters

8- **Parameters corrections**:

a) If necessary, *adjust the vertical scale* of speed and current:
- If the trace overflows the window ⇨ increase the scale.
- If the trace is too pressed ⇨ decrease the scale.

In the above visualized trace, it is not necessary to change the speed scale nor the current scale.

b) Set the *Trigger* on the rising edge (or falling edge) of the signal in Channel 1, choosing a trigger level based upon the signal to be visualized. Setting a level that is too high will result in no data acquisition.
Having the above visualized traces, it is convenient to set the trigger on the rising edge and with a level equal to 500 (in the range between -1000 and +1000); in fact setting a level too high (>1000 or <-1000) should result in no valid trigger event.

c) If necessary, *adjust the horizontal scale*, *Time Base* parameter:
- To visualize more periods of input signals ⇨ increase Time Base parameter.
- To visualize less periods of input signals ⇨ decrease Time Base parameter.

In the above visualized trace, it is not necessary to change the time base.

d) To avoid the continuous trace refresh and to visualize the signal on the first valid trigger event:

1. click on icon ■.
2. select **Single Acquisition**.
3. click on icon ▶.
4. at each new desired acquisition click on icon ▶.

Doing the adjustments described above, we acquired the traces illustrated in the following:

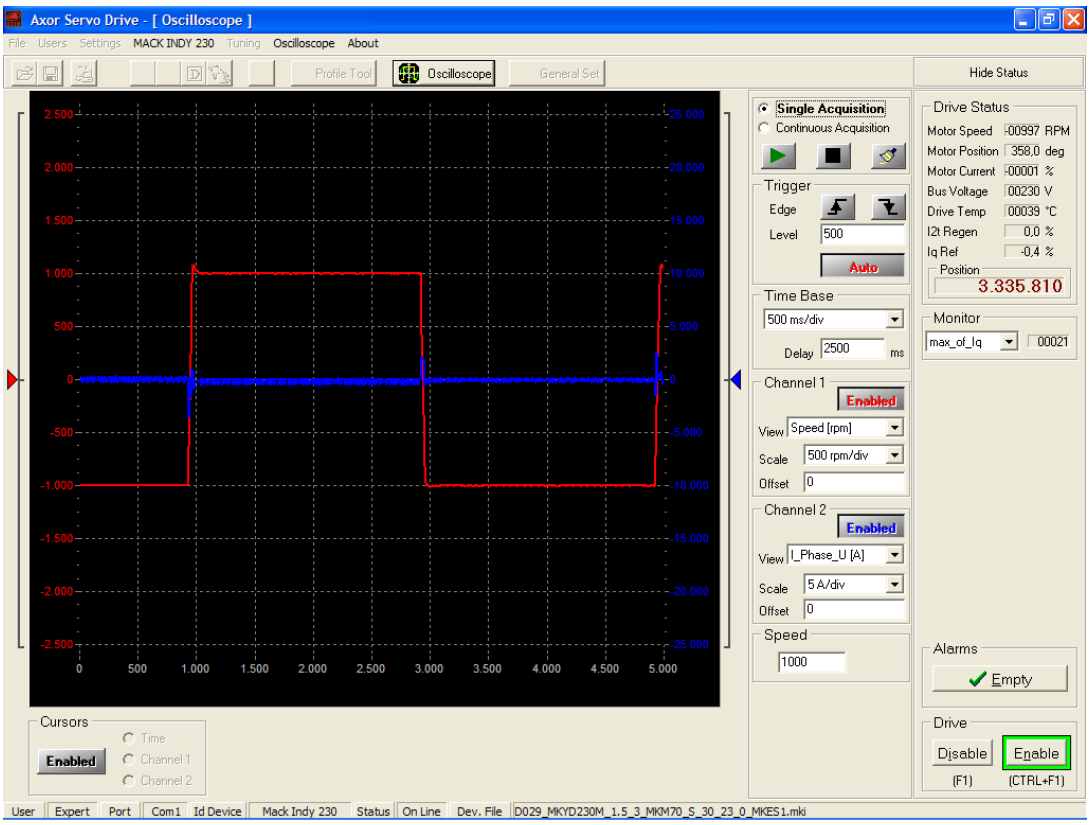

Traces visualized after parameter adjustment

Conformity

European directives and norms

The servodrives are "*components*" that are intended to be incorporated into electrical plant and machines for industrial use.
When the servodrive is used into machines or plant, the electrical plant/machine must respect the following directives: **EC Machinery Directive** (**2006/42/EC**), **EC Directive on EMC** (**2004/108/EC**), **Low Voltage Directive** (**2006/95/EEC**).

The machine/plant manufacturer must examine whether with its machine/plant still further or other standards or EEC guidelines are to be used.

EC Conformity

The **EC** mark that is applied to the drives references to the **Low Voltage Directive** (**2006/95/EC**) and **EC Directive on EMC** (**2004/108/EC**).

The standard EN 61800-5-1 is applied to ensure conformance with the Low Voltage Directive.
The standard EN 61800-3 is applied to ensure conformance with the EMC Directive.
In reference to noise immunity and noise emission the converters fulfil the requirement to the category *second environment* (industrial environment).
If the installation of the drive is carried out differently than described in this manual, the user must carry out new measures to satisfy the requisites of law.

Since AXOR INDUSTRIES 1988

MOTORS SERVO DRIVES

AXOR INDUSTRIES®

viale **Stazione, 5**
36054 Montebello Vic.
Vicenza - Italy

phone **(+39) 0444 440441**
fax **(+39) 0444 440418**
info@axorindustries.com

www.axorindustries.com

CERTIFIED UNI EN ISO 9001 CERTIFIED N.9135 CERTIFIED

CSQ CERTIFICAZIONE DEI SISTEMI DI QUALITA' DELLE AZIENDE UNI EN ISO 9001 CERTIFIED N° 9135